PROPOSED GROCERY STORE
ZONING COMPLIANCE PERMIT - PHASE ONE

ORANGE COUNTY, NORTH CAROLINA

2018-05-03

PREPARED FOR:

OWNER/DEVELOPER

LEON CAPITAL GROUP

5970 FAIRVIEW ROAD, SUITE 450

CHARLOTTE, NC 28210

(336) 327-3050

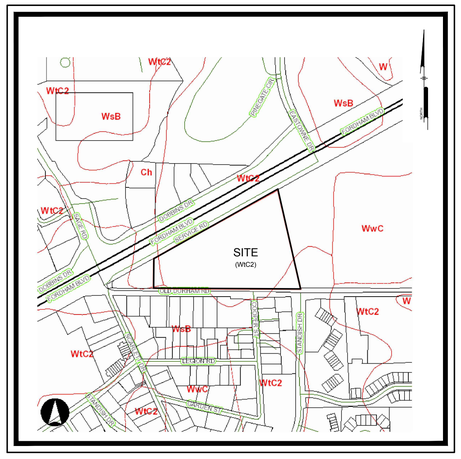

SOILS MAP

NTS

LOCATION MAP

NTS

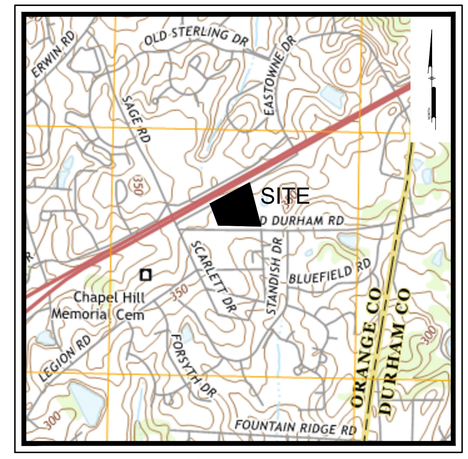

USGS MAP

NTS

PREPARED BY:

PENNONI ASSOCIATES INC.

Pennoni

Firm License
F-1267

401 Providence Road #200
Chapel Hill, NC 27514
T 919.929.1173
F 919.493.6548

North Carolina 811
www.nc811.org

SHEET INDEX			
SHEET	PAGE	SHEET NAME	DATE SUBMITTED
CS0001	1	COVER SHEET	5/3/2018
CS0002	2	GENERAL NOTES AND LEGEND	5/3/2018
CS0003	3	GENERAL NOTES	5/3/2018
CS0500	4	CONSTRUCTION MANAGEMENT PLAN	5/3/2018
CS0201	5	EXISTING CONDITIONS PLAN	5/3/2018
CS0501	6	DEMOLITION PLAN	5/3/2018
CS1501	7	PHASE ONE GRADING PLAN	5/3/2018
CS6001	8	DETAILS	5/3/2018
CS6002	9	DETAILS	5/3/2018
CS6003	10	DETAILS	5/3/2018

PRELIMINARY
NOT FOR CONSTRUCTION

ALL DIMENSIONS MUST BE VERIFIED BY CONTRACTOR AND OWNER MUST BE NOTIFIED OF ANY DISCREPANCIES BEFORE PROCEEDING WITH WORK

NORTH CAROLINA REGISTERED PROFESSIONAL ENGINEER SEAL 042486 RALPH L. BUMAN

PROPOSED GROCERY STORE
1814 DURHAM-CHAPEL HILL BLVD.
CHAPEL HILL, NC 27514

COVER SHEET

LEON CAPITAL GROUP
5970 FAIRVIEW ROAD, SUITE 450
CHARLOTTE, NC 28210

NO.	DATE	REVISIONS	BY
3	5/03/2018	PER TOWN COMMENTS	SAK
2	3/30/2018	PER TOWN COMMENTS	JJB
1	2/23/18	PER TOWN COMMENTS	RLM

ALL DOCUMENTS PREPARED BY PENNONI ASSOCIATES ARE INSTRUMENTS OF SERVICE IN RESPECT OF THE PROJECT. THEY ARE NOT INTENDED OR REPRESENTED TO BE SUITABLE FOR REUSE BY OWNER OR OTHERS ON THE EXTENSIONS OF THE PROJECT OR ON ANY OTHER PROJECT. ANY REUSE WITHOUT WRITTEN VERIFICATION OR ADAPTATION BY PENNONI ASSOCIATES FOR THE SPECIFIC PURPOSE INTENDED WILL BE AT OWNERS SOLE RISK AND WITHOUT LIABILITY OR LEGAL EXPOSURE TO PENNONI ASSOCIATE; AND OWNER SHALL INDEMNIFY AND HOLD HARMLESS PENNONI ASSOCIATES FROM ALL CLAIMS, DAMAGES, LOSSES AND EXPENSES ARISING OUT OF OR RESULTING THEREFROM.

PROJECT	LCGR1601
DATE	2018-01-26
DRAWING SCALE	AS SHOWN
DRAWN BY	SAK
APPROVED BY	JJB

CS0001

SHEET 1 OF 10

P:\Projects\LCGR\DOWNLCGR1601-Grocery Site\DESIGN_PUBLISH\Phase 1\CS0001.dwg PLOTTED: 5/3/2018 3:36 PM, BY: Scott Knoell PLOTSTYLE: Pennoni NCS.ctb PROJECT STATUS: PHASE 1

LEGEND

EXISTING	PROPOSED	DESCRIPTION
		CABLE TV, JUNCTION BOX
		CABLE TV, MANHOLE
OC OC	OC OC	CABLE TV, OVERHEAD
		CABLE TV, PANEL BOX
		CABLE TV, PEDESTAL
		CABLE TV, STUB OUT
UC UC	UC UC	CABLE TV, UNDERGROUND
		CABLE TV, WITNESS POST
		CHANNEL
		COMMUNICATION, HANDHOLE
		COMMUNICATION, JUNCTION BOX
		COMMUNICATION, MANHOLE
OC OC	OC OC	COMMUNICATION, OVERHEAD
		COMMUNICATION, PANEL BOX
		COMMUNICATION, PEDESTAL
		COMMUNICATION, STUB OUT
UC UC	UC UC	COMMUNICATION, UNDERGROUND
		COMMUNICATION, WITNESS POST
		CONTROL, BENCHMARK
		CONTROL, GPS
		CONTROL, MAPPING
		CONTROL, REFERENCE
		CONTROL, TRAVERSE
		CURB
		CURB DEPRESSION
		SPILL CURB
		EDGE OF PAVEMENT
		EDGE OF GRAVEL
		EASEMENT
		FENCE
		FIBER OPTIC, HANDHOLE
		FIBER OPTIC, JUNCTION BOX
		FIBER OPTIC, MANHOLE
FO FO	FO FO	FIBER OPTIC, OVERHEAD
		FIBER OPTIC, PANEL BOX
		FIBER OPTIC, PEDESTAL
		FIBER OPTIC, STUB OUT
FO FO	FO FO	FIBER OPTIC, UNDERGROUND
		FIBER OPTIC, WITNESS POST
		FLOODPLAIN
		FUEL, MANHOLE
OFG OFG	OFG OFG	FUEL, OVERHEAD
		FUEL, PLUG
		FUEL, PUMP
UFG UFG	UFG UFG	FUEL, UNDERGROUND
		GUIDE RAIL
		LIMITS OF DISTURBANCE
		MARKING, HANDICAP PARKING
		NATURAL GAS, METER
		NATURAL GAS, MANHOLE
OG OG	OG OG	NATURAL GAS, OVERHEAD
		NATURAL GAS, STUB OUT
		NATURAL GAS, VALVE UNDERGROUND
UG UG	UG UG	NATURAL GAS, WITNESS POST
		PHONE, HANDHOLE
		PHONE, JUNCTION BOX
		PHONE, MANHOLE
		PHONE, OVERHEAD
OT OT	OT OT	PHONE, PANEL BOX
		PHONE, PEDESTAL
		PHONE, STUB OUT
		PHONE, UNDERGROUND
UT UT	UT UT	PHONE, WITNESS POST
		POWER, GUY POLE
		POWER, GUY WIRE
		POWER, HANDHOLE
		POWER, JUNCTION BOX
		POWER, SINGLE HEAD LIGHT
		POWER, DOUBLE HEAD LIGHT
		POWER, FOUR HEAD LIGHT
		POWER, LIGHT
		POWER, WALL SCONCE
		POWER, LIGHT POLE SINGLE
		POWER, LIGHT POLE DOUBLE
		POWER, MANHOLE
OE OE	OE	POWER, OVERHEAD
		POWER, METER
		POWER, PANEL BOX
		POWER, PEDESTAL
		POWER, STUB OUT
		POWER, TRANSFORMER
UE UE	E E	POWER, UNDERGROUND
		POWER, UTILITY POLE
		POWER, WITNESS POST
		POWER, YARD LIGHT
		PROPERTY, LINE
		LEGAL RIGHT-OF-WAY
		PROPERTY, CORNER FOUND
		PROPERTY, CORNER FOUND (OTHERS)
		PROPERTY, CONCRETE MONUMENT
		PROPERTY, ADJOINING LINED
		PROPERTY, LINE RESERVED
		RAIL, MILE MARKER
		RAIL, PANEL BOX
		RAIL, TRACK
		SITE, AIR COMPRESSOR
		SITE, AIR CONDITIONER
		SITE, BOLLARD
		SITE, BORING LOCATION
		BUILDING
		SITE, FLAG POLE
		SITE, HEAD STONE
		SITE, MAIL BOX
		SITE, MONITOR WELL
		SITE, POST
		SITE, SIGN POST AND BOARD
		SITE, TRAFFIC SIGN
		SOIL BOUNDARY

GENERAL NOTES:

1. APPLICANT:
   LEON CAPITAL GROUP, LLC
   5970 FAIRVIEW ROAD, SUITE 200
   CHARLOTTE, NORTH CAROLINA 28212

   RESPONSIBLE OFFICER:
   TODD HARRELSON

1. THIS PLAN REFERENCE DOCUMENTS AND INFORMATION BY:

   A.) BOUNDARY TOPOGRAPHIC SURVEY, PREPARED BY PHILIP POST & ASSOCIATES, A DIVISION OF PENNONI
   401 PROVIDENCE ROAD, SUITE 200 CHAPEL HILL, NC 27514
   FIELD DATE: 06/14/2016
   B.) OLD DURHAM ROAD IMPROVEMENT PLANS, TRANSFERRED FROM KIMLEY HORN AND ASSOCIATES, INC. VIA EMAIL TO OUR OFFICE ON JULY 21, 2016
   C.) ALTA/NSPS LAND TITLE SURVEY FOR 120 OLD DURHAM ROAD, BY FREEHOLD LAND SURVEYS, SIGNED JUNE 14, 2016
   D.) ALTA/NSPS LAND TITLE SURVEY FOR 126 OLD DURHAM ROAD, BY FREEHOLD LAND SURVEYS, SIGNED MAY 23, 2016
   E.) ORANGE COUNTY GIS INFORMATION
   F.) WATER & SANITARY SEWER INFORMATION BASED UPON VISIBLE EVIDENCE IN THE FIELD AT TIME OF SURVEY AND INFORMATION PROVIDED BY OWASA

2. EXISTING TOPOGRAPHIC FEATURES WERE TAKEN FROM A TOPOGRAPHIC SURVEY PLAN PROVIDED BY PHILIP POST & ASSOC. DATED: 6/14/2016.

3. UTILITY NOTES:
   A. COMPLETENESS OR ACCURACY OF LOCATION AND DEPTH OF UNDERGROUND UTILITIES AND STRUCTURES IS NOT GUARANTEED.
   B. LOCATION OF ALL EXISTING AND PROPOSED SERVICES ARE APPROXIMATE AND SHALL BE CONFIRMED INDEPENDENTLY WITH LOCAL UTILITY COMPANIES PRIOR TO COMMENCEMENT OF ANY CONSTRUCTION OR EXCAVATION. SANITARY SEWER AND ALL OTHER UTILITY SERVICE CONNECTION POINTS SHALL BE CONFIRMED INDEPENDENTLY BY THE CONTRACTOR IN THE FIELD PRIOR TO THE COMMENCEMENT OF CONSTRUCTION. ALL DISCREPANCIES SHALL BE REPORTED IMMEDIATELY IN WRITING TO THE ENGINEER. CONSTRUCTION SHALL COMMENCE BEGINNING AT THE LOWEST INVERT (POINT OF CONNECTION) AND PROGRESS UP GRADIENT. PROPOSED INTERFACE POINTS (CROSSINGS) WITH EXISTING UNDERGROUND UTILITIES SHALL BE FIELD VERIFIED BY TEST PIT PRIOR TO COMMENCEMENT OF CONSTRUCTION.
   C. ALL UTILITIES AND SERVICES INCLUDING BUT NOT LIMITED TO GAS, WATER, ELECTRIC, SANITARY AND STORM SEWER, TELEPHONE, CABLE, FIBER OPTIC, ETC. WITHIN THE LIMITS OF DISTURBANCE SHALL BE VERTICALLY AND HORIZONTALLY LOCATED. THE CONTRACTOR SHALL USE AND COMPLY WITH THE REQUIREMENTS OF THE APPLICABLE UTILITY NOTIFICATION SYSTEM TO LOCATE ALL THE UNDERGROUND UTILITIES. THE CONTRACTOR IS RESPONSIBLE FOR REPAIRS OF DAMAGE TO ANY EXISTING UTILITIES DURING CONSTRUCTION AT NO COST TO THE OWNER.

4. AS SHOWN ON THE FLOOD INSURANCE RATE MAP FOR ORANGE COUNTY, NC, MAP #3710979900K, EFFECTIVE DATE 2/2/2007 THE SITE AREA PROPOSED TO BE DEVELOPED LIES WITHIN "ZONE X" DEFINED AS AREAS DETERMINED TO BE OUTSIDE THE 100 YEAR FLOOD PLAIN.

5 FIRE WATCH; DURING CONSTRUCTION AND DEMOLITION WHERE HOT WORK, MATERIALS SUBJECT TO SPONTANEOUS COMBUSTION, OR OTHER HAZARDOUS CONSTRUCTION OR DEMOLITION IS OCCURRING, THE OWNER OR THEIR DESIGNEE SHALL BE RESPONSIBLE FOR MAINTAINING A FIRE WATCH. THE FIRE WATCH SHALL CONSIST OF AT LEAST ONE PERSON WITH A MEANS OF COMMUNICATING AN ALARM TO 911, SHALL A WRITTEN ADDRESS POSTED IN A CONSPICUOUS LOCATION AND SHALL MAINTAIN CONSTANT PATROLS. NC FPC 2012 SECTION 1404.

6. CONSTRUCTION/DEMOLITION; ALL CONSTRUCTION AND DEMOLITION CONDUCTED SHALL BE IN COMPLIANCE OF THE CURRENT EDITION OF CHAPTER 14 OF THE NC FPC.

7. PRIOR TO ISSUANCE OF A CERTIFICATE OF OCCUPANCY APPLICANT SHALL REPLACE ANY TREES SHOWN AS PRESERVED-PROTECTED ON THE LANDSCAPE PROTECTION PLAN THAT HAVE DIED OR ARE IN POOR HEALTH AS A RESULT OF LAND DISTURBING ACTIVITIES.

8. PRIOR TO ISSUANCE OF A ZONING COMPLIANCE PERMIT APPLICANT SHALL RECORD A RECOMBINATION PLAT FOR THE FOUR PROPERTIES WITH THE ORANGE COUNTY REGISTRY. AN EXEMPT PLAT APPLICATION TO BE REVIEWED AND APPROVED BY THE TOWN IS REQUIRED FOR THIS ACTION.

9. SITE DISTURBANCE (OVERALL): 15.25 AC. (PHASE 1): 14.84 AC.

LEGEND

EXISTING	PROPOSED	DESCRIPTION
		SANITARY SEWER, CLEAN-OUT
FM FM	FM FM	SANITARY SEWER, FORCE MAIN
		SANITARY SEWER, FORCE MAIN MANHOLE
		SANITARY SEWER, FORCE STUB OUT
		SANITARY SEWER, LATERAL
		SANITARY SEWER, MANHOLE
S S	S S	SANITARY SEWER, UNDERGROUND (4" DIA TO 10" DIA)
		SANITARY SEWER, SEPTIC TANK
		SANITARY SEWER, STUB OUT
		SANITARY SEWER, VALVE
		SANITARY SEWER, WITNESS POST
		STREAM
		STORM SEWER, INLET
		STORM SEWER,HEADWALL
		STORM SEWER, MANHOLE
D D		STORM SEWER, UNDERGROUND
		STORM SEWER, DOWNSPOUT LOCATION
	RD RD	STORM SEWER, ROOF DRAIN LINE
		STORM SEWER, STAND PIPE
		STORM SEWER, CLEAN-OUT
		STORM SEWER, WITNESS POST
101	101	MINOR CONTOUR
100	100	MAJOR CONTOUR
X 100.5	100.5	SPOT ELEVATION
	T.B.R.	TO BE REMOVED
		TRAFFIC, PAVEMENT MARKING, BIKE LANE
		TRAFFIC, PAVEMENT MARKING, TURN ARROWS
		TRAFFIC, PAVEMENT MARKING, HOV LANE
		TRAFFIC, HAND HOLE
		TRAFFIC, JUNCTION BOX
		TRAFFIC, MANHOLE
		TRAFFIC, PANEL BOX
		TRAFFIC, PEDESTAL
		TRAFFIC, PEDESTRIAN SIGNAL
		TRAFFIC, SIGNAL POLE
		TRAFFIC, SIGNAL POLE & LIGHT ARM
		TRAFFIC, STUB OUT
		VEGETATION, SHRUB
		VEGETATION, GRASS LINE / LANDSCAPED AREA
		VEGETATION, DECIDUOUS SHOWING CANOPY
		VEGETATION, CONIFEROUS SHOWING CANOPY
		VEGETATION, TREE LINE
		WATER, HOSE BIB
		WATER, FIRE HYDRANT
		WATER, IRRIGATION HEAD
		WATER, IRRIGATION VALVE BOX
		WATER, MANHOLE
		WATER, METER
		WATER, POST INDICATOR VALVE
		WATER, SIAMESE CONNECTION
		WATER, STUB OUT
W W	W W	WATER, UNDERGROUND
F F	F F	WATER, UNDERGROUND FIRE
		WATER, VALVE
		WATER, WITNESS POST

GENERAL NOTES

A. PROJECT OFFICE WALL SWPPP POSTINGS:
THE FOLLOWING ITEMS MUST BE POSTED TOGETHER IN A SINGLE, ORGANIZED LOCATION ON A WALL INSIDE THE PROJECT OFFICE: 1) SWPPP SITE MAPS (ALL PHASES); 2) SWPPP DETAIL SHEETS; 3) MAP SHOWING LOCATION OF OFFSITE IMPORT OR EXPORT FACILITY; 4) REVISIONS TO DETAILS, SITE MAPS, OR SWPPP-RELATED RFIS; 5) SITE SWPPP BINDER; 6) SWCT PLACARD; 7) CURRENT OWNER STORMWATER COMPLIANCE TRAINING CERTIFICATES FOR SUPERINTENDENT(S) AND COMPLIANCE OFFICER(S); AND 8) CERTIFICATIONS AND/OR TRAINING CERTIFICATES REQUIRED TO PERFORM INSPECTIONS BY THE APPLICABLE CONSTRUCTION GENERAL PERMIT OR AUTHORITY HAVING JURISDICTION.

B. PERMITTED PROJECT AREA:
FOR PURPOSES OF THIS SWPPP AND ASSOCIATED STORMWATER PERMIT, 'PERMITTED PROJECT AREA' IS DEFINED AS ANY AND ALL AREAS WITHIN THE PROJECT LIMITS OF DISTURBANCE, AS SHOWN ON THE SWPPP SITE MAPS AND IDENTIFIED IN THE NOTICE OF INTENT TO THE AGENCY. ALL GROUND-DISTURBING AND CONSTRUCTION-RELATED ACTIVITIES (MATERIAL STORAGE, DUMPSTERS, PARKING AREAS, PROJECT OFFICE TRAILER, ETC.) MUST BE INCLUDED WITHIN THE PERMITTED PROJECT AREA LIMITS OF DISTURBANCE.

OFFSITE AREA(S) TO BE DISTURBED AS PART OF THIS PROJECT (NOT ON OWNER PROPERTY):

NO OFF-SITE WORK IS PROPOSED AS PART OF PHASE ONE.

THE CONTRACTOR IS REQUIRED TO LOCATE OFFICE TRAILERS AND MATERIAL STORAGE AREAS FOR THE PROJECT WITHIN THE LIMITS OF DISTURBANCE. THE CONTRACTOR MAY REQUEST USE OF OFF-SITE LOCATIONS FOR OFFICE TRAILERS OR NON-ERODIBLE MATERIAL STORAGE; HOWEVER, APPROVAL MUST BE OBTAINED FROM THE JURISDITION, ENGINEER AND OWNER PRIOR TO THEIR USE. REQUESTS WILL BE REVIEWED ON A CASE BY CASE BASIS AND IF APPROVED, LIMITATIONS ON USE WILL BE PROVIDED BY THE ENGINEER.

C. SPECIAL PROJECT AREAS:

THERE ARE NO SPECIAL PROJECTS, LOCATED BEYOND THE OWNER PERMITTED PROJECT AREA, REQUIRING INSPECTION AND MAINTENANCE ASSOCIATED WITH THIS CONSTRUCTION PROJECT.

D.1 NON-STORMWATER DISCHARGES:
THE GENERAL PERMIT FOR STORMWATER DISCHARGES ASSOCIATED WITH CONSTRUCTION ACTIVITIES PROHIBITS MOST NON-STORMWATER DISCHARGES DURING THE CONSTRUCTION PHASE. ALLOWABLE NON-STORMWATER DISCHARGES THAT OCCUR DURING CONSTRUCTION ON THIS PROJECT AS SPECIFIED IN THE EPA GENERAL PERMIT ARE AS FOLLOWS:
- DISCHARGES FROM EMERGENCY FIRE-FIGHTING ACTIVITIES
- FIRE HYDRANT FLUSHINGS;
- LANDSCAPE IRRIGATION;
- WATER USED TO WASH VEHICLES AND EQUIPMENT, PROVIDED THAT THERE IS NO DISCHARGE OF SOAPS, SOLVENTS, OR DETERGENTS USED FOR SUCH PURPOSES;
- WATER USED TO CONTROL DUST;
- POTABLE WATER INCLUDING UNCONTAMINATED WATER LINE FLUSHINGS;
- ROUTINE EXTERNAL BUILDING WASHDOWN THAT DOES NOT USE DETERGENTS;
- PAVEMENT WASH WATERS PROVIDED SPILLS OR LEAKS OF TOXIC OR HAZARDOUS MATERIALS HAVE NOT OCCURRED (UNLESS ALL SPILL MATERIAL HAS BEEN REMOVED) AND WHERE DETERGENTS ARE NOT USED. YOU ARE PROHIBITED FROM DIRECTING PAVEMENT WASH WATERS DIRECTLY INTO ANY SURFACE WATER, STORM DRAIN INLET, OR STORMWATER CONVEYANCE, UNLESS THE CONVEYANCE IS CONNECTED TO A SEDIMENT BASIN, SEDIMENT TRAP, OR SIMILARLY EFFECTIVE CONTROL;
- UNCONTAMINATED AIR CONDITIONING OR COMPRESSOR CONDENSATE;
- UNCONTAMINATED, NON-TURBID DISCHARGES OF GROUND WATER OR SPRING WATER;
- FOUNDATION OR FOOTING DRAINS WHERE FLOWS ARE NOT CONTAMINATED WITH PROCESS MATERIALS SUCH AS SOLVENTS OR CONTAMINATED GROUND WATER; AND

BEST MANAGEMENT PRACTICES (BMPS) MUST BE IMPLEMENTED FOR THE GENERAL PERMIT ALLOWABLE DISCHARGES FOR THE DURATION OF THE PERMIT. THE TECHNIQUES DESCRIBED IN THIS SWPPP FOCUS ON PROVIDING CONTROL OF POLLUTANT DISCHARGES WITH PRACTICAL APPROACHES THAT UTILIZE READILY AVAILABLE EXPERTISE, MATERIAL, AND EQUIPMENT.

NON-STORMWATER COMPONENTS OF SITE DISCHARGES MUST BE UNCONTAMINATED NON-TURBID WATER. ALL NON-STORMWATER DISCHARGES MUST BE ROUTED TO A STORMWATER CONTROL PRIOR TO DISCHARGE. WATER USED FOR CONSTRUCTION WHICH DISCHARGES FROM THE SITE MUST ORIGINATE FROM A PUBLIC WATER SUPPLY OR PRIVATE WELL APPROVED BY THE STATE HEALTH DEPARTMENT. WATER USED FOR CONSTRUCTION THAT DOES NOT ORIGINATE FROM AN APPROVED PUBLIC SUPPLY MUST NOT DISCHARGE FROM THE SITE; IT CAN BE RETAINED IN RETENTION PONDS UNTIL IT INFILTRATES OR EVAPORATES. WHEN NON-STORMWATER IS DISCHARGED FROM THE SITE, IT MUST BE DONE IN A MANNER SUCH THAT IT DOES NOT CAUSE EROSION OF THE SOIL DURING DISCHARGE.

D.2 POWER WASHING:
PROCESS WATER SUCH AS POWER WASHING WATER AND CONCRETE CUTTING EFFLUENT, AMONG OTHERS, MUST BE COLLECTED FOR TREATMENT AND DISPOSAL. IT MUST NOT BE FLUSHED INTO THE SITE STORM DRAIN SYSTEM OR DISCHARGED OFF-SITE.

E. DISCHARGE POINTS:
ALL DISCHARGE POINTS MUST BE INSPECTED TO DETERMINE WHETHER EROSION AND SEDIMENTATION CONTROL MEASURES ARE EFFECTIVE IN PREVENTING DISCHARGE OF SEDIMENT FROM THE SITE AND/OR IMPACTS TO RECEIVING WATERS. SEDIMENT ACCUMULATION DOWNGRADIENT OF DISCHARGE LOCATIONS SHALL BE REPORTED AS A SEDIMENT DISCHARGE AND THE POTENTIAL UPSTREAM CAUSE SHALL BE INVESTIGATED TO PREVENT FUTURE OCCURRENCE. CONTACT THE ENGINEER AND OWNER TO DETERMINE APPROPRIATE ACTION FOR CLEANUP OF DISCHARGED SEDIMENT THAT MAY BE OUTSIDE OF THE LIMITS OF DISTURBANCE.

EROSION AND SEDIMENT CONTROL NOTES

A. CONTRACTOR SHALL IMPLEMENT BEST MANAGEMENT PRACTICES AS REQUIRED BY THIS STORM WATER POLLUTION PREVENTION PLAN. ADDITIONAL BEST MANAGEMENT PRACTICES SHALL BE IMPLEMENTED AS DICTATED BY CONDITIONS AT NO ADDITIONAL COST OF OWNER THROUGHOUT ALL PHASES OF CONSTRUCTION.

B. BEST MANAGEMENT PRACTICES (BMP'S) AND CONTROLS SHALL CONFORM TO FEDERAL, STATE, OR LOCAL REQUIREMENTS OR MANUAL OF PRACTICE, AS APPLICABLE. CONTRACTOR SHALL IMPLEMENT ADDITIONAL CONTROLS AS DIRECTED BY PERMITTING AGENCY OR OWNER.

C. SITE MAP MUST CLEARLY DELINEATE ALL STATE WATERS. PERMITS FOR ANY CONSTRUCTION ACTIVITY IMPACTING STATE WATERS OR REGULATED WETLANDS MUST BE MAINTAINED ON SITE AT ALL TIMES.

D. CONTRACTOR TO LIMIT DISTURBANCE OF SITE IN STRICT ACCORDANCE WITH SWPPP IMPLEMENTATION SEQUENCING, OR AS REQUIRED BY THE APPLICABLE GENERAL PERMIT. NO UNNECESSARY OR IMPROPERLY SEQUENCED CLEARING AND/OR GRADING SHALL BE PERMITTED.

E. ALL PERIMETER DIKES, SWALES, DITCHES, PERIMETER SLOPES AND ALL SLOPES STEEPER THAN 3 HORIZONTAL TO 1 VERTICAL (3:1) SHALL BE PROVIDED TEMPORARY OR PERMANENT STABILIZATION WITH GROUND COVER (SUCH AS THE USE OF FAST-GERMINATING ANNUAL GRASS/GRAIN VARIETIES, STRAW/HAY MULCH, WOOD CELLULOSE FIBERS, TACKIFIERS, NETTING AND/OR BLANKETS) AS SOON AS PRACTICABLE BUT IN ANY EVENT WITHIN 7 CALENDAR DAYS FROM THE LAST LAND-DISTURBING ACTIVITY. (NC GENERAL PERMIT)

F. ALL OTHER DISTURBED AREAS SHALL BE PROVIDED TEMPORARY OR PERMANENT STABILIZATION WITH GROUND COVER (SUCH AS THE USE OF FAST-GERMINATING ANNUAL GRASS/GRAIN VARIETIES, STRAW/HAY MULCH, WOOD CELLULOSE FIBERS, TACKIFIERS, NETTING AND/OR BLANKETS) AS SOON AS PRACTICABLE BUT IN ANY EVENT WITHIN 14 CALENDAR DAYS FROM THE LAST LAND-DISTURBING ACTIVITY.(NC GENERAL PERMIT)

G. SLOPES SHALL BE LEFT IN A ROUGHENED CONDITION DURING THE GRADING PHASE TO REDUCE RUNOFF VELOCITIES AND EROSION. TEMPORARY AND/OR PERMANENT STABILIZATION SHALL BE APPLIED PER ABOVE REQUIREMENTS.

H. DUE TO THE GRADE CHANGES DURING THE DEVELOPMENT OF THE PROJECT, THE CONTRACTOR SHALL BE RESPONSIBLE FOR ADJUSTING THE EROSION AND SEDIMENT CONTROL MEASURES (SILT FENCES, ETC.) TO PREVENT EROSION AND POLLUTANT DISCHARGE OFF-SITE.

I. ALL MEASURES STATED ON THIS SITE MAP, AND IN THE STORM WATER POLLUTION PREVENTION PLAN, SHALL BE MAINTAINED IN FULLY FUNCTIONAL CONDITION UNTIL NO LONGER REQUIRED FOR A COMPLETED PHASE OF WORK OR FINAL STABILIZATION OF THE SITE. ALL EROSION AND SEDIMENTATION CONTROL MEASURES SHALL BE CHECKED BY A QUALIFIED PERSON IN ACCORDANCE WITH THE APPLICABLE PERMIT, WHICHEVER IS MORE STRINGENT, AND REPAIRED IN ACCORDANCE WITH THE SITE PLANS.

J. ALL CONTROLS AND SYSTEMS MUST BE INSTALLED AND FUNCTIONING AS DESIGNED AND FREE OF ACCUMULATED SEDIMENT AND DEBRIS DURING FINAL PROJECT INSPECTION AND APPROVAL.

HAZARDOUS MATERIAL MANAGEMENT & SPILL REPORTING

ANY HAZARDOUS OR POTENTIALLY HAZARDOUS MATERIAL THAT IS BROUGHT ONTO THE CONSTRUCTION SITE SHALL BE HANDLED PROPERLY TO REDUCE THE POTENTIAL FOR STORMWATER POLLUTION. ALL MATERIALS USED ON THIS CONSTRUCTION SITE SHALL BE PROPERLY STORED, HANDLED, DISPENSED AND DISPOSED OF FOLLOWING ALL APPLICABLE LABEL DIRECTIONS. FLAMMABLE AND COMBUSTIBLE LIQUIDS SHALL BE STORED AND HANDLED ACCORDING TO APPLICABLE REGULATIONS, AND, AT A MINIMUM, ACCORDING TO 29 CFR 1926.152. ONLY APPROVED CONTAINERS AND PORTABLE TANKS SHALL BE USED FOR STORAGE AND HANDLING OF FLAMMABLE AND COMBUSTIBLE LIQUIDS.

MATERIAL SAFETY DATA SHEETS (MSDS) INFORMATION SHALL BE KEPT ON SITE FOR ANY AND ALL APPLICABLE MATERIALS. HOWEVER, MSDS MAY ALSO BE ACCESSED VIA TELEPHONE OR OTHER ELECTRONIC MEANS.

IN THE EVENT OF AN ACCIDENTAL SPILL, IMMEDIATE ACTION SHALL BE TAKEN BY THE GC TO CONTAIN AND REMOVE THE SPILLED MATERIAL. THE SPILL SHALL BE REPORTED TO THE APPROPRIATE AGENCIES IN THE REQUIRED TIME FRAMES. AS REQUIRED UNDER THE PROVISIONS OF THE CLEAN WATER ACT, ANY SPILL OR DISCHARGE ENTERING WATERS OF THE UNITED STATES SHALL BE PROPERLY REPORTED.

ALL HAZARDOUS MATERIALS, INCLUDING CONTAMINATED SOIL AND LIQUID CONCRETE WASTE, SHALL BE DISPOSED OF BY THE CONTRACTOR IN THE MANNER SPECIFIED BY FEDERAL, STATE AND LOCAL REGULATIONS AND BY THE MANUFACTURER OF SUCH PRODUCTS.

THE GC SHALL PREPARE A WRITTEN RECORD OF ANY SPILL AND ASSOCIATED CLEAN-UP ACTIVITIES OF PETROLEUM PRODUCTS OR HAZARDOUS MATERIALS IN EXCESS OF 1 GALLON OR REPORTABLE QUANTITIES, WHICHEVER IS LESS, ON THE DAY OF THE SPILL. THE GC SHALL PROVIDE NOTICE TO OWNER, VIA THE ONLINE CRITICAL INCIDENT REPORT, IMMEDIATELY UPON IDENTIFICATION OF ANY SPILL. SPILL REPORT FORMS ARE AVAILABLE IN THE ONLINE SWPPP REPORTING SYSTEM PROVIDED BY THE OWNER. COPIES OF SPILL CRITICAL INCIDENT REPORTS SHOULD BE PRINTED AND MAINTAINED IN THE JOBSITE BINDER.

ANY SPILLS OF PETROLEUM PRODUCTS OR HAZARDOUS MATERIALS IN EXCESS OF REPORTABLE QUANTITIES AS DEFINED BY EPA OR THE STATE OR LOCAL AGENCY REGULATIONS, SHALL BE IMMEDIATELY REPORTED TO THE EPA NATIONAL RESPONSE CENTER (1-800-424-8802) AND TOWN OF CHAPEL HILL.

THE STATE REPORTABLE QUANTITY FOR PETROLEUM PRODUCTS IS:
IF THE PETROLEUM DISCHARGED, RELEASED OR SPILLED:
IS 25 GALLONS OR MORE, OR
CAUSES A SHEEN ON NEARBY SURFACE WATER, OR
IS 100 FEET OR LESS FROM SURFACE WATER BODY,
THEN THE PERSON OWNING OR HAVING CONTROL OVER THE OIL MUST IMMEDIATELY TAKE MEASURE TO COLLECT AND REMOVE THE DISCHARGE, AND REPORT THE DISCHARGE TO NCDENR WITHIN 24 HOURS OF DISCHARGE, AND BEGIN TO RESTORE AREA AFFECTEDBY DISCHARGE.

IF THE PETROLEUM RELEASED OR SPILLED:
IS LESS THAN 25 GALLONS OR MORE,
DOES NOT CAUSES A SHEEN ON NEARBY SURFACE WATER, AND
IS MORE THAN 100 FEET OR LESS FROM SURFACE WATER BODY,
THEN THE PERSON WHO OWNS OR HAS CONTROL OVER THE OIL MUST IMMEDIATELY TAKE MEASURE TO COLLECT AND REMOVE THE DISCHARGE. IF IT CANNOT BE CLEANED UP WITHIN 24 HOURS OF THE DISCHARGE OR CAUSE A SHEEN ON NEARBY SURFACE WATER, THE PERSON MUST IMMEDIATELY NOTIFY NCDENR.

IF THE PETROLEUM RELEASED OR SPILLED IN ANY CIRCUMSTANCES DOES NOT MEET ONE OF THE ABOVE REQUIREMENTS, OR IS NOT PERMITTED BY GS 143-215.1, OR IT IS NOT PURSUANT TO A RULE ADOPTED BY THE ENVIRONMENTAL MANAGEMENT COMMISSION OR, A REGULATION OF USEPA, IT MUST BE REPORTED TO NCDENR IMMEDIATELY.
THE REPORTABLE QUANTITY FOR HAZARDOUS MATERIALS CAN BE FOUND ON 40 CFR 302 AND WWW.NCGA.STATE.NC.US/STATUTES/STATUTES_IN_HTML/CHP1430.HTML

TO MINIMIZE THE POTENTIAL FOR A SPILL OF PETROLEUM PRODUCT OR HAZARDOUS MATERIALS TO COME IN CONTACT WITH STORMWATER, THE FOLLOWING STEPS SHALL BE IMPLEMENTED:

1) ALL MATERIALS WITH HAZARDOUS PROPERTIES, SUCH AS PESTICIDES, PETROLEUM PRODUCTS, FERTILIZERS, SOAPS, DETERGENTS, CONSTRUCTION CHEMICALS, ACIDS, BASES, PAINTS, PAINT SOLVENTS, ADDITIVES FOR SOIL STABILIZATION, CONCRETE, CURING COMPOUNDS AND ADDITIVES, ETC., SHALL BE STORED IN A SECURE LOCATION, UNDER COVER AND IN APPROPRIATE, TIGHTLY SEALED CONTAINERS WHEN NOT IN USE.

2) THE MINIMUM PRACTICAL QUANTITY OF ALL SUCH MATERIALS SHALL BE KEPT ON THE JOB SITE AND SCHEDULED FOR DELIVERY AS CLOSE TO TIME OF USE AS PRACTICAL.

3) ALL PRODUCTS SHALL BE STORED IN AND USED FROM THE ORIGINAL CONTAINER WITH THE ORIGINAL PRODUCT LABEL. CONTAINERS MUST BE STORED IN A MANNER TO PROTECT THEM FROM THE ELEMENTS AND INCIDENTAL DAMAGE.

4) ALL PRODUCTS SHALL BE USED IN STRICT COMPLIANCE WITH INSTRUCTIONS ON THE PRODUCT LABEL.

5) THE DISPOSAL OF EXCESS OR USED PRODUCTS SHALL BE IN STRICT COMPLIANCE WITH INSTRUCTIONS ON THE PRODUCT LABEL AND REGULATIONS.

GENERAL CONSERVATION NOTES AND SPECIFICATIONS

I. GENERAL INFORMATION

A. THIS EROSION AND SEDIMENT CONTROL PLAN SHALL BE AVAILABLE AT THE SITE.

B. NO SEDIMENT OR SEDIMENT LADEN WATER MUST BE ALLOWED TO LEAVE THE SITE WITHOUT FIRST BEING PROPERLY FILTERED.

C. ANY SEDIMENT THAT IS TRACKED ONTO THE ROAD MUST BE CLEANED OFF BEFORE THE END OF THE DAY.

D. DISTURBED AREAS ON WHICH EARTHMOVING ACTIVITIES HAVE CEASED AND WHICH WILL REMAIN EXPOSED SHALL BE STABILIZED IMMEDIATELY, EITHER TEMPORARILY OR PERMANENTLY, INCLUDING THE RESTORATION OF DRIVEWAYS, STOCKPILES, OFF-SITE UNDERGROUND UTILITY LINES AND GRADED PERIMETER AREAS. DURING NON-GERMINATION PERIODS, MULCH MUST BE APPLIED AT RECOMMENDED RATES. CRUSHED STONE ON PAVEMENT SUBGRADES IS CONSIDERED ADEQUATE PROTECTION.

E. AREAS THAT FAIL TO GERMINATE MUST BE RE-SEEDED OR MULCHED.

F. WHERE DISTURBED AREAS ARE DIFFICULT TO STABILIZE, NETTING SHOULD BE USED TO HOLD SEED AND MULCH IN PLACE; THIS IS ESPECIALLY IMPORTANT AROUND WATERCOURSES, IN SWALES AND AREAS OF CONCENTRATED FLOWS, STEEP SLOPES.

G. UNTIL THE SITE IS STABILIZED, ALL EROSION AND SEDIMENTATION MUST BE MAINTAINED PROPERLY. MAINTENANCE MUST INCLUDE INSPECTIONS OF ALL EROSION AND SEDIMENT CONTROL AFTER EACH RUNOFF EVENT AND ON A WEEKLY BASIS. ALL PREVENTATIVE AND REMEDIAL MAINTENANCE WORK, INCLUDING CLEAN OUT, REPAIR, REPLACEMENT, RE-GRADING, RE-SEEDING, RE-MULCHING, AND RE-NETTING, MUST BE PERFORMED IMMEDIATELY.

H. IF AT ANY TIME PRIOR TO SITE STABILIZATION ANY EROSION PROBLEMS OCCUR WHICH REQUIRE ADDITIONAL CONTROLS, IMMEDIATE ACTION MUST BE TAKEN TO CORRECT THE PROBLEMS.

I. THE CONTRACTOR MUST DEVELOP AND COORDINATE WITH OWNER AND HAVE APPROVED BY THE AUTHORITY HAVING JURISDICTION, A SEPARATE EROSION AND SEDIMENT POLLUTION CONTROL PLAN FOR EACH SPOIL, BORROW OR OTHER WORK AREA NOT DETAILED ON THE PERMITTED PLANS, WHETHER LOCATED WITHIN OR OUTSIDE OF THE LIMITS OF CONSTRUCTION.

J. CONTRACTOR SHALL NOTIFY THE AUTHORITY HAVING JURISDICTION OF DISPOSAL METHOD AND LOCATION OF MATERIALS (IF ANY) TO BE REMOVED FROM SITE.

K. STANDARD FOR DISPOSAL OF MATERIALS ALL MATERIALS TO BE RECYCLED OR DISPOSED OF MUST DO SO IN ACCORDANCE WITH ALL APPLICABLE STATE AND LOCAL REGULATIONS. STOCKPILES TO BE HAULED OFF SITE MUST HAVE AN APPROVED EROSION AND SEDIMENT CONTROL PLAN AT THE DESTINATION LOCATION.

II. STANDARD FOR LAND GRADING

A. DEFINITION: RESHAPING THE GROUND SURFACE BY GRADING TO PLAN GRADES, WHICH ARE DETERMINED BY TOPOGRAPHIC SURVEY AND LAYOUT.
   1. PROVISIONS SHALL BE MADE TO SAFELY CONDUCT SURFACE WATER TO STORM DRAINS OR SUITABLE WATER COURSES AND TO PREVENT SURFACE RUNOFF FROM DAMAGING CUT FACES AND FULL SLOPES.
   2. ADJOINING PROPERTY SHALL BE PROTECTED FROM EXCAVATION AND FILLING OPERATIONS.

B. INSTALLATION REQUIREMENTS
   1. TIMBER, LOGS, BRUSH, RUBBISH, ROCKS, STUMPS AND VEGETABLE MATTER WHICH WILL INTERFERE WITH THE GRADING OPERATION OR AFFECT THE PLANNED STABILITY OR FILL AREAS SHALL BE REMOVED AND DISPOSED OF IN ACCORDANCE WITH STANDARD FOR DISPOSAL OF MATERIALS.
   2. FILL MATERIAL IS TO BE FREE OF BRUSH, RUBBISH, TIMBER, LOGS, VEGETATIVE MATTER AND STUMPS IN AMOUNTS THAT WILL BE DETRIMENTAL TO CONSTRUCTING STABLE FILLS.
   3. ALL FILLS SHALL BE COMPACTED SUFFICIENTLY FOR THEIR INTENDED PURPOSE AND AS REQUIRED TO REDUCE SLIPPING, EROSION OR EXCESS SATURATION.
   4. ALL DISTURBED AREAS SHALL BE LEFT WITH A NEAT AND FINISHED APPEARANCE AND SHALL BE PROTECTED FROM EROSION.

PRELIMINARY
NOT FOR CONSTRUCTION

III. STANDARD FOR UTILITY TRENCH EXCAVATION

A. LIMIT ADVANCE CLEARING AND GRUBBING OPERATIONS TO A DISTANCE EQUAL TO TWO TIMES THE LENGTH OF PIPE INSTALLATION THAT CAN BE COMPLETED IN ONE DAY.
B. LIMIT DAILY TRENCH EXCAVATION TO THE LENGTH OF PIPE PLACEMENT, PLUG INSTALLATION AND BACKFILLING THAT CAN BE COMPLETED THE SAME DAY. DAILY BACKFILLING OF THE TRENCH MAY BE DELAYED FOR A MAX. OF SIX DAYS FOR CERTAIN CASES REQUIRING TESTING OF THE INSTALLED PIPE.
C. WATER WHICH ACCUMULATES IN THE OPEN TRENCH WILL BE COMPLETELY REMOVED BY PUMPING TO A FACILITY FOR REMOVAL OF SEDIMENT (SEDIMENT FILTER BAG, SEE DETAIL) BEFORE PIPE PLACEMENT AND/OR BACKFILLING BEGINS.
D. ON THE DAY FOLLOWING PIPE PLACEMENT AND TRENCH BACKFILLING, THE DISTURBED AREA WILL BE GRADED TO FINAL CONTOURS AND APPROPRIATE TEMPORARY EROSION AND SEDIMENT POLLUTION CONTROL MEASURES / FACILITIES WILL BE INSTALLED. SEEDING AND MULCHING OF ALL DISTURBED AREAS WILL BE DONE IMMEDIATELY.
E. WORK CREWS AND EQUIPMENT FOR TRENCHING, PLACEMENT OF PIPE, PLUG CONSTRUCTION AND BACKFILLING WILL BE SELF CONTAINED AND SEPERATE FORM CLEARING AND GRUBBING AND SITE RESTORATION AND STABILIZATION OPERATIONS.
F. ALL SOIL EXCAVATED FROM THE TRENCH WILL BE PLACED ON THE UPHILL SIDE OF THE TRENCH.

IV. STANDARD FOR TEMPORARY STABILIZATION

A. STANDARD FOR TEMPORARY STABILIZATION WITH MULCH
   1. MULCHING IS MOST APPLICABLE TO THOSE AREAS SUBJECT TO PERIODIC DISTURBANCE AND REWORKING. IN ADDITION, STABILIZATION WITH MULCH SHALL BE USED DURING NON-GERMINATION PERIODS.
   2. PERFORM ALL CULTURAL OPERATIONS AT RIGHT ANGLES TO THE SLOPE.
   3. GRADE AS NEED AND FEASIBLE. SEE STANDARD FOR LAND GRADING.
   4. PROTECTIVE MATERIALS TO BE USED:
      A. UNROTTED SMALL-GRAIN STRAW OR HAY AT 3.0 TONS PER ACRE SPREAD UNIFORMLY AT 135 POUNDS PER 1000 SQUARE FEET AND ANCHORED WITH LIQUID MULCH BINDER OR; WOOD-FIBER OR PAPER-FIBER MULCH AT A RATE OF 1500 POUNDS PER ACRE MAY BE APPLIED BY A
      B. HYDROSEEDER OR HYDROMULCHER. USE IS LIMITED TO FLATTER SLOPES AND DURING OPTIMUM SEEDING PERIODS IN SPRING AND FALL. LIQUID MULCH BINDERS: APPLY IMMEDIATELY AFTER PLACEMENT OF HAY OR STRAW MULCH TO MINIMIZE LOSS BY WIND OR WATER. IF EMULSIFIED ASPHALT - (SS-1, CSS-1, CMS-2, MS-2, RS-1, RS-2, CRS-1 AND CRS-2), APPLY 0.04 GAL./SQ. YD. OR 194 GAL./ACRE ON FLAT SLOPES LESS THAN 8' HIGH. ON SLOPES 8' OR MORE HIGH USE 0.075 GAL./SQ. YD. OR 363 GAL./ACRE.

B. STANDARD FOR TEMPORARY STABILIZATION WITH SEED
   1. DISTURBED AREAS WHICH ARE NOT AT FINISHED GRADE AND WHICH WILL BE REDISTURBED WITHIN ONE YEAR MUST BE SEEDED AND MULCHED IMMEDIATELY WITH A TEMPORARY COVER.
   2. SEEDBED PREPARATION
      A. PERFORM ALL CULTURAL OPERATIONS AT RIGHT ANGLES TO SLOPE.
      B. APPLY GROUND LIMESTONE AT A RATE OF 1 TON/AC.
      C. APPLY 10-10-10 FERTILIZER A RATE OF 150 LB/AC.
      D. WORK LIME AND FERTILIZER INTO THE SOIL AS NEARLY AS PRACTICAL TO A DEPTH OF FOUR (4) INCHES.

C. SEEDING
   1. SEED MIXTURE TEMPORARY: WINTER RYE SHALL BE APPLIED AT A RATE OF 168 LB/ACRE
   2. APPLY SEED UNIFORMLY. NORMAL SEEDING DEPTH IS FROM 1/4" TO 1/2". HYDROSEEDINGS(INCLUDING FERTILIZER AND SEED IN A SLURRY FORM), MAY BE LEFT ON THE SOIL SURFACE. SOIL CONSERVATION DISTRICT CAN REQUIRE SPECIFIC TECHNIQUES FOR HYDROSEEDING AND/OR HYDROMULCHING IN AREAS WITH DROUGHTY CONDITIONS. FOR MULCHING REQUIREMENTS, SEE STANDARD FOR STABILIZATION WITH MULCH.

V. STANDARD FOR TEMPORARY STABILIZATION

A. STANDARD FOR TEMPORARY STABILIZATION WITH MULCH
   1. MULCHING IS MOST APPLICABLE TO THOSE AREAS SUBJECT TO PERIODIC DISTURBANCE AND REWORKING. IN ADDITION, STABILIZATION WITH MULCH SHALL BE USED DURING NON-GERMINATION PERIODS.
   2. PERFORM ALL CULTURAL OPERATIONS AT RIGHT ANGLES TO THE SLOPE.
   3. GRADE AS NEED AND FEASIBLE. SEE STANDARD FOR LAND GRADING.
   4. PROTECTIVE MATERIALS TO BE USED:
      A. UNROTTED SMALL-GRAIN STRAW OR HAY AT 3.0 TONS PER ACRE SPREAD UNIFORMLY AT 135 POUNDS PER 1000 SQUARE FEET AND ANCHORED WITH LIQUID MULCH BINDER OR; WOOD-FIBER OR PAPER-FIBER MULCH AT A RATE OF 1500 POUNDS PER ACRE MAY BE APPLIED BY A HYDROSEEDER OR HYDROMULCHER. USE IS LIMITED TO FLATTER SLOPES AND DURING OPTIMUM SEEDING PERIODS IN SPRING AND FALL. LIQUID MULCH BINDERS: APPLY IMMEDIATELY AFTER PLACEMENT OF HAY OR STRAW MULCH TO MINIMIZE LOSS BY WIND OR WATER. IF EMULSIFIED ASPHALT - (SS-1, CSS-1, CMS-2, MS-2, RS-1, RS-2, CRS-1 AND CRS-2), APPLY 0.04 GAL./SQ. YD. OR 194 GAL./ACRE ON FLAT SLOPES LESS THAN 8' HIGH. ON SLOPES 8' OR MORE HIGH USE 0.075 GAL./SQ. YD. OR 363 GAL./ACRE.

B. STANDARD FOR TEMPORARY STABILIZATION WITH SEED
   1. DISTURBED AREAS WHICH ARE NOT AT FINISHED GRADE AND WHICH WILL BE REDISTURBED WITHIN ONE YEAR MUST BE SEEDED AND MULCHED IMMEDIATELY WITH A TEMPORARY COVER.
   2. SEEDBED PREPARATION
      A. PERFORM ALL CULTURAL OPERATIONS AT RIGHT ANGLES TO SLOPE.
      B. APPLY GROUND LIMESTONE AT A RATE OF 1 TON/AC.
      C. APPLY 10-10-10 FERTILIZER A RATE OF 150 LB/AC.
      D. WORK LIME AND FERTILIZER INTO THE SOIL AS NEARLY AS PRACTICAL TO A DEPTH OF FOUR (4) INCHES.

C. SEEDING
   1. SEED MIXTURE TEMPORARY: WINTER RYE SHALL BE APPLIED AT A RATE OF 168 LB/ACRE
   2. APPLY SEED UNIFORMLY. NORMAL SEEDING DEPTH IS FROM 1/4" TO 1/2". HYDROSEEDINGS (INCLUDING FERTILIZER AND SEED IN A SLURRY FORM), MAY BE LEFT ON THE SOIL SURFACE. SOIL CONSERVATION DISTRICT CAN REQUIRE SPECIFIC TECHNIQUES FOR HYDROSEEDING AND/OR HYDROMULCHING IN AREAS WITH DROUGHTY CONDITIONS. FOR MULCHING REQUIREMENTS, SEE STANDARD FOR STABILIZATION WITH MULCH.

VI. STANDARD FOR PERMANENT STABILIZATION

A. SPECIFICATION FOR SEEDING & SOIL TREATMENT FOR PERMANENT VEGETATIVE COVER
   1. SITE PREPARATION
      A. GRADE AS NEEDED AND FEASIBLE TO PERMIT THE USE OF CONVENTIONAL EQUIPMENT FOR SEEDBED PREPARATION, SEEDING, MULCH APPLICATION AND ANCHORING, AND MAINTENANCE.
      B. SUBSOIL SHOULD BE TESTED FOR LIME REQUIREMENT AND LIMESTONE, IF NEEDED, SHOULD BE APPLIED TO BRING SOIL PH TO 6.5 AND INCORPORATED INTO THE SOIL AS NEARLY AS PRACTICAL TO A DEPTH OF 4 INCHES.
      C. IMMEDIATELY PRIOR TO TOPSOIL DISTRIBUTION, THE SURFACE SHOULD BE SCARIFIED TO PROVIDE A GOOD BOND WITH THE TOPSOIL.
   2. APPLYING TOPSOIL
      A. TOPSOIL SHOULD BE HANDLED ONLY WHEN IT IS DRY ENOUGH TO WORK WITHOUT DAMAGING SOIL STRUCTURE.
      B. ALL DISTURBED TOPSOIL ON-SITE IS TO BE REDISTRIBUTED ON-SITE IN AREAS NOT COVERED BY IMPERVIOUS SURFACES. NO REMOVAL OF TOPSOIL IS ALLOWED UNLESS APPROVED BY THE AUTHORITY HAVING JURISDICTION. A UNIFORM APPLICATION TO A DEPTH OF 5 INCHES (UNSETTLED) IS RECOMMENDED. SOILS WITH A PH OF 4.0 OR LESS OR CONTAINING IRON SULFIDE SHALL BE COVERED WITH A MINIMUM DEPTH OF 12 INCHES OF SOIL HAVING A PH OF 5.0 OR MORE.
   3. SEEDBED PREPARATION
      A. PERFORM ALL CULTURAL OPERATIONS AT RIGHT ANGLES TO SLOPE.
      B. APPLY 10-20-10 OR EQUIVALENT RATED FERTILIZER AT A RATE OF 500 POUNDS PER ACRE OR 11 POUNDS PER 1000 SQUARE FEET.
      C. APPLY 300 POUNDS 38-0-0 PER ACRE OR EQUIVALENT OF SLOW RELEASE NITROGEN.
      D. APPLY PULVERIZED DOLOMITIC LIMESTONE AT A RATE OF 1/3 TONS PER ACRES OR 15 POUNDS PER 1000 SQUARE FEET.
      E. WORK LIME AND FERTILIZER INTO THE SOIL AS NEARLY AS PRACTICAL TO A DEPTH OF 4 INCHES CONTINUE TILLAGE UNTIL A REASONABLY UNIFORM FINE SEEDBED IS PREPARED.
      F. REMOVE FROM THE SURFACE ALL STONES TWO INCHES OR LARGER IN ANY DIMENSION, REMOVE ALL OTHER DEBRIS, SUCH AS WIRE, CABLE, TREE ROOTS, PIECES OF CONCRETE, CLODS, LUMPS OR OTHER UNSUITABLE MATERIAL.
      G. INSPECT SEEDBED JUST BEFORE SEEDING. IF TRAFFIC HAS LEFT THE SOIL COMPACTED, THE AREA MUST BE RE-TILLED AND FIRMED AS ABOVE.
   4. SEEDING
      A. SEED MIXTURE PERMANENT: TURF TYPE TALL FESCUE (BLEND) (#170 FESCUE #50 BERMUDA #30 CENTIPEDE) AT A RATE OF 250 LB/ACRE OR 6 LB/SF IN ADDITION TO TEMPORARY SEEDING (SEE ABOVE)
         1. SEEDING DATES 3/1 TO 5/15 8/15 TO 10/1
         2. SEED MIX SHALL HAVE A PURE LIVE SEED (PLS) RATING OF 60% OR GREATER
      B. APPLY SEED UNIFORMLY. NORMAL SEEDING DEPTH IS FROM 1/4" TO 1/2". HYDROSEEDINGS (INCLUDING FERTILIZER AND SEED IN A SCURRY FORM), WHICH ARE MULCHED, MAY BE LEFT ON THE SOIL SURFACE. AUTHORITY HAVING JURISDICTION CAN REQUIRE SPECIFIC TECHNIQUES FOR HYDROSEEDING AND/OR HYDROMULCHING IN AREAS WITH DROUGHTY CONDITIONS. FOR MULCHING REQUIREMENTS SEE STANDARD FOR STABILIZATION WITH MULCH: PROTECTIVE MATERIALS TO BE USED.
      C. UNROTTED SMALL-GRAIN STRAW OR HAY AT 3.0 TONS PER ACRE SPREAD UNIFORMLY AT 135 POUNDS PER 1000 SQUARE FEET AND ANCHORED WITH LIQUID MULCH BINDER OR; WOOD-FIBER OR PAPER-FIBER MULCH AT A RATE OF 1500 POUNDS PER ACRE MAY BE APPLIED BY A HYDROSEEDER OR HYDROMULCHER
   5. IRRIGATION - (WHERE FEASIBLE)
      A. IF SOIL MOISTURE IS DEFICIENT AND MULCH IS NOT USED, SUPPLY NEW SEEDINGS WITH ADEQUATE WATER, A MINIMUM OF 1/4" TWICE A DAY UNTIL VEGETATION IS WELL ESTABLISHED, ESPECIALLY WHEN SEEDING IS PERFORMED IN ABNORMALLY DRY OR HOT WEATHER OR ON DROUGHTY SITES.

Pennoni
Firm License F-1267
PENNONI ASSOCIATES INC.
401 Providence Road #200
Chapel Hill, NC 27514
T 919.929.1173 F 919.493.6548

ALL DIMENSIONS MUST BE VERIFIED BY CONTRACTOR AND OWNER MUST BE NOTIFIED OF ANY DISCREPANCIES BEFORE PROCEEDING WITH WORK

NORTH CAROLINA PROFESSIONAL ENGINEER SEAL 042486

PROPOSED GROCERY STORE
1814 DURHAM-CHAPEL HILL BLVD
CHAPEL HILL, NC 27514

GENERAL NOTES AND LEGEND

LEON CAPITAL GROUP
5970 FAIRVIEW ROAD, SUITE 450
CHARLOTTE, NC 28210

NO.	DATE	REVISIONS	BY
3	5/03/2018	PER TOWN COMMENTS	SAK
2	3/30/2018	PER TOWN COMMENTS	JJB
1	2/23/18	PER TOWN COMMENTS	RLM

ALL DOCUMENTS PREPARED BY PENNONI ASSOCIATES ARE INSTRUMENTS OF SERVICE IN RESPECT OF THE PROJECT. THEY ARE NOT INTENDED OR REPRESENTED TO BE SUITABLE FOR REUSE BY OWNER OR OTHERS ON THE EXTENSIONS OF THE PROJECT OR ON ANY OTHER PROJECT. ANY REUSE WITHOUT WRITTEN VERIFICATION OR ADAPTATION BY PENNONI ASSOCIATES FOR THE SPECIFIC PURPOSE INTENDED WILL BE AT OWNERS SOLE RISK AND WITHOUT LIABILITY OR LEGAL EXPOSURE TO PENNONI ASSOCIATES; AND OWNER SHALL INDEMNIFY AND HOLD HARMLESS PENNONI ASSOCIATES FROM ALL CLAIMS, DAMAGES, LOSSES AND EXPENSES ARISING OUT OF OR RESULTING THEREFROM

PROJECT	LCGR1601
DATE	2018-01-26
DRAWING SCALE	NTS
DRAWN BY	SAK
APPROVED BY	JJB

CS0002

PLOTTED: 5/3/2018 3:36 PM, BY: Scott Knowll   PLOTSTYLE: Pennoni NCS.stb   PROJECT STATUS: PHASE 1
Projects\LCGR\LCGR1601-Grocery Site\DESIGN_PUBLISH\Phase 1\CS0002.dwg

GENERAL INFORMATION (CONTINUED)

B. STANDARD FOR PERMANENT STABILIZATION WITH SOD (IF NECESSARY)

1. METHODS AND MATERIALS
   - A. CULTIVATED SOD IS PREFERRED OVER NATIVE OR PASTURE SOD. SPECIFY "CERTIFIED SOD," OR OTHER HIGH QUALITY CULTIVATED SOD.
   - B. SOD SHOULD BE FREE OF WEEDS AND UNDESIRABLE COARSE WEEDY GRASSES.
   - C. SOD SHOULD BE OF UNIFORM THICKNESS, APPROXIMATELY 5/8 INCH, PLUS OR MINUS 1/4 INCH, AT TIME OF CUTTING. (EXCLUDES TOP GROWTH).
   - D. SOD SHOULD BE VIGOROUS AND DENSE AND BE ABLE TO RETAIN ITS OWN SHAPE AND WEIGHT WHEN SUSPENDED VERTICALLY WITH A FIRM GRASP FROM THE UPPER 10% OF THE STRIP. BROKEN PADS OR TORN AND UNEVEN ENDS WILL NOT BE ACCEPTABLE.
   - E. FOR DROUGHTY SITES A SOD OF KENTUCKY 31 TALL FESCUE AND BLUEGRASS IS PREFERRED OVER A STRAIGHT BLUEGRASS SOD.
   - F. ONLY MOIST, FRESH UNHEATED SOD SHOULD BE USED. SOD SHOULD BE HARVESTED, DELIVERED AND INSTALLED WITHIN A PERIOD OF 36 HOURS.
2. SITE PREPARATION
   SEE SPECIFICATION FOR SEEDING & SOIL TREATMENT FOR PERMANENT VEGETATIVE COVER.
3. APPLYING TOPSOIL
   SEE SPECIFICATION FOR SEEDING & SOIL TREATMENT FOR PERMANENT VEGETATIVE COVER.
4. SEEDBED PREPARATION
   SEE SPECIFICATION FOR SEEDING & SOIL TREATMENT FOR PERMANENT VEGETATIVE COVER.
5. SOD PLACEMENT
   - A. SOD STRIPS SHOULD BE LAID ON THE CONTOUR, NEVER UP AND DOWN THE SLOPE, STARTING AT THE BOTTOM OF THE SLOPE AND WORKING UP. ON STEEP SLOPES, THE USE OF LADDERS WILL FACILITATE THE WORK AND PREVENT DAMAGE TO THE SOD. DURING PERIODS OF HIGH TEMPERATURE, LIGHTLY IRRIGATE THE SOIL IMMEDIATELY PRIOR TO LAYING THE SOD.
   - B. PLACE SOD STRIPS WITH SNUG EVEN JOINTS THAT ARE STAGGERED. OPEN SPACES INVITE EROSION.
   - C. ROLL OR TAMP SOD IMMEDIATELY FOLLOWING PLACEMENT TO INSURE SOLID CONTACT OF ROOT MAT AND SOIL SURFACE. DO NOT OVERLAP SOD. ALL JOINTS SHOULD BE BUTTED TIGHTLY IN ORDER TO PREVENT VOIDS, WHICH WOULD CAUSE DRYING OF THE ROOTS.
   - D. ON SLOPES GREATER THAN 3 TO 1, SECURE SOD TO SURFACE SOIL WITH WOOD PEGS, WIRE STAPLES, OR SPLIT SHINGLES (8 TO 10 INCHES LONG BY 3/4 INCH WIDE).
   - E. SURFACE WATER CANNOT ALWAYS BE DIVERTED FROM FLOWING OVER THE FACE OF THE SLOPE, BUT A CAPPING STRIP OF HEAVY JUTE OR PLASTIC NETTING, PROPERLY SECURED, ALONG THE CROWN OF THE SLOPE AND EDGES WILL PROVIDE EXTRA PROTECTION AGAINST LIFTING AND UNDERCUTTING OF SOD. THE SAME TECHNIQUE CAN BE USED TO ANCHOR SOD IN WATER-CARRYING CHANNELS AND OTHER CRITICAL AREAS. WIRE STAPLES MUST BE USED TO ANCHOR NETTING IN CHANNEL WORK.
   - F. IMMEDIATELY FOLLOWING INSTALLATION, SOD SHOULD BE WATERED UNTIL MOISTURE PENETRATES THE SOIL LAYER BENEATH SOD TO A DEPTH OF 4 INCHES. MAINTAIN OPTIMUM MOISTURE FOR AT LEAST TWO WEEKS.
6. TOP DRESSING
   IF SLOW RELEASE NITROGEN (300 POUNDS 38-0-0 PER ACRE OR EQUIVALENT) IS USED IN ADDITION SUGGESTED FERTILIZER, THEN A FOLLOW-UP OF TOP DRESSING IS NOT MANDATORY.
   - A. SPRING INSTALLATION OF SOD WILL REQUIRE AN APPLICATION OF FERTILIZER SUCH AS 10-20-10 EQUIVALENT AT 400 POUNDS PER ACRE OR 10 POUNDS PER 1,000 SQUARE FEET BETWEEN SEPTEMBER 1 AND OCTOBER 15.
   - B. FALL INSTALLATION OF SOD WILL REQUIRE THE ABOVE BETWEEN MARCH 15 AND MAY 1.

NCDEQ EROSION AND SEDIMENT CONTROL NOTES

1. ON-SITE BURIAL PITS ARE NOT ALLOWED AT ANY LOCATION WITHIN THE TOWN OF CHAPEL HILL.
2. ANY GRADING BEYOND THE LIMITS OF CONSTRUCTION SHOWN ON THIS PLAN IS SUBJECT TO A FINE.
3. GRADING 1 ACRE OR MORE WITHOUT AN APPROVED EROSION CONTROL PLAN IS A VIOLATION AND SUBJECT TO A FINE.
4. GROUND STABILIZATION MUST OCCUR WITHIN 7 DAYS ON PERIMETER AREAS AND SLOPES GREATER THAN 3:1, AND GROUND STABILIZATION MUST OCCUR WITHIN 14 DAYS ON OTHER AREAS.
5. BASIN OUTLET STRUCTURES WITH DRAINAGE AREAS EQUAL OR GREATER THAN ONE ACRES MUST WITHDRAW WATER FROM THE SURFACE.
6. ADDITIONAL MEASURES TO CONTROL EROSION AND SEDIMENT MAY BE REQUIRED BY THE ORANGE COUNTY OR TOWN OF CHAPEL HILL CONTROL INSPECTOR.
7. ALL ELEVATIONS ARE IN REFERENCE TO THE SURVEYORS BENCHMARK WHICH MUST BE VERIFIED BY THE GENERAL CONTRACTOR PRIOR TO GROUND BREAKING.
8. ALL EROSION CONTROL MEASURES SHALL BE CONSTRUCTED IN ACCORDANCE WITH THE N.C. EROSION AND SEDIMENT CONTROL PLANNING AND DESIGN MANUAL, U.S. DEPT. OF AGRICULTURE, AND ANY APPLICABLE LOCAL LAWS AND CODES.
9. PERMANENT CUT AND FILL SLOPES PLACED ON A SUITABLE FOUNDATION SHOULD BE CONSTRUCTED AT 2:1(HORIZONTAL TO VERTICAL) OR FLATTER. PERMANENT SLOPES OF 3:1 SHOULD BE CONSTRUCTED WHERE MOWING IS DESIRABLE AND AS INDICATED. IF FILL MATERIAL IS BROUGHT ONTO THE PROPERTY OR IF WASTE MATERIAL IS HAULED FROM THE PROPERTY THEN THE CONTRACTOR SHALL DISCLOSE THE LOCATION OF ANY ON-SITE AND/OR OFF-SITE BARROW LOCATION AND/OR WASTE BURIAL LOCATION TO THE EROSION CONTROL INSPECTOR.
10. ANY REPORT SUBMITTED TO NCDEQ OR ORANGE COUNTY MUST ALSO BE SENT TO THE TOWN OF CHAPEL HILL ENGINEERING DEPARTMENT ATTENTION DIRECTOR INCLUDING ANY SELF INSPECTION REPORTS.
11. LIMITS OF CLEARING SHOWN ARE BASED ON CUT AND FILL SLOPES OR OTHER GRADING REQUIREMENTS.
12. CONTRACTOR SHALL INSTALL ALL EROSION CONTROL MEASURES AS INDICATED PRIOR TO GRADING OPERATIONS. NO DEVICE MAY BE REMOVED WITHOUT APPROVAL OF EROSION CONTROL COORDINATOR.
13. CONTRACTOR SHALL BLEND NEW EARTHWORK SMOOTHLY WITH EXISTING CONTOURS.
14. ALL DISTANCES ARE HORIZONTAL GROUND.
15. ANCHOR SILT FENCE WITH COMPACTED BACKFILL ON TREE PROTECTION ZONES. DO NOT BURY.
16. ALL EROSION CONTROL DEVICES SHOULD BE CHECKED PERIODICALLY AND AFTER EVERY MAJOR STORM EVENT. IF ANY FAILURES ARE FOUND, THEY SHOULD BE REPAIRED AS SOON AS POSSIBLE.
17. ANY ASSOCIATED DEMOLITION PERMITS AND METHODS OF DEMOLITION ARE TO BE OBTAINED AND ARRANGED BY THE CONTRACTOR PRIOR TO CONSTRUCTION.
18. SEDIMENT TRAPS AND BASINS NEED TO BE STABILIZED IMMEDIATELY AFTER INSTALLATION.
19. STONE OUTLETS SHOULD BE INSTALLED AT LOW POINTS OF THE SILT FENCING, BASED ON FIELD CONDITIONS.
20. EFFECTIVE OCTOBER 1, 2010, PERSONS RESPONSIBLE FOR LAND DISTURBING ACTIVITIES MUST INSPECT A PROJECT AFTER EACH PHASE OF THE PROJECT TO MAKE SURE THAT THE APPROVED EROSION AND SEDIMENTATION CONTROL PLAN IS BEING FOLLOWED. SELF-INSPECTION REPORTS ARE REQUIRED. A SAMPLE SELF-INSPECTION REPORT, AS WELL AS DETAILS OF THE SELF-INSPECTION PROGRAM, CAN BE FOUND ON THE LAND QUALITY WEBSITE. IF YOU HAVE QUESTIONS OF THE SELF-INSPECTION PROGRAM, PLEASE VISIT HTTPS://DEQ.NC.GOV

ORANGE COUNTY SOLID WASTE NOTES

1. CONSTRUCTION WASTE
   - a. ALL EXISTING STRUCTURES 500 SQUARE FEET AND LARGER SHALL BE ASSESSED PRIOR TO THE ISSUANCE OF A DEMOLITION PERMIT TO ENSURE COMPLIANCE WITH THE COUNTY'S REGULATED RECYCLABLE MATERIALS ORDINANCE (RRMO) AND TO ASSESS THE POTENTIAL FOR DECONSTRUCTION AND/OR THE REUSE OF SALVAGEABLE MATERIALS.
   - b. PURSUANT TO THE COUNTY'S RRMO, CLEAN WOOD WASTE, SCRAP METAL, AND CORRUGATED CARDBOARD PRESENT IN CONSTRUCTION OR DEMOLITION WASTE MUST BE RECYCLED.
   - c. AFTER THE PROPERTY IS VACATED BY THE CURRENT OWNER, HENDRICK AUTOMOTIVE GROUP, A PRE-DEMOLITION MEETING SHALL BE COORDINATED WITH OCSW TO ASSESS THE SITE FOR SALVAGEABLE AND RECYCLABLE MATERIALS.
   - d. PURSUANT TO THE COUNTY'S RRMO, ALL HAULERS OF MIXED CONSTRUCTION AND DEMOLITION WASTE WHICH INCLUDES ANY REGULATED RECYCLABLE MATERIALS SHALL BE LICENSED BY ORANGE COUNTY.
   - e. PRIOR TO ANY DEMOLITION OR CONSTRUCTION ACTIVITY ON THE SITE, THE APPLICANT SHALL HOLD A PRE-DEMOLITION/PRE-CONSTRUCTION CONFERENCE WITH SOLID WASTE STAFF. THIS MAY BE THE SAME PRE-CONSTRUCTION MEETING HELD WITH OTHER DEVELOPMENT/ENFORCEMENT OFFICIALS.
   - f. THE PRESENCE IF ANY ASBESTOS CONTAINING MATERIALS (ACM) AND/OR OTHER HAZARDOUS MATERIALS SHALL BE HANDLED IN ACCORDANCE WITH ANY AND ALL LOCAL, STATE, AND FEDERAL REGULATIONS AND GUIDELINES.
   - g. CARDBOARD SHALL BE RECYCLED BY TENANT OF THE BUILDING. CARDBOARD SHALL BE INTERNALLY BAILED AND RECYCLED.
   - h. GARBAGE SHALL BE DISPOSED OF IN THE REAR THIRTY-FIVE (35) CUBIC YARD, SELF-CONTAINED COMPACTOR IN THE REAR OF THE BUILDING. TENANT SHALL ALSO USE EIGHT (8) CUBIC YARD MIXED RECYCLING DUMPSTER, WHICH IS LOCATED IN THE REAR OF THE BUILDING.
   - i. TENANT SHALL UTILIZE TWENTY (20) ROLL-OUT CARTS FOR FOOD-WASTE MANAGEMENT. THESE CARTS SHALL BE STORED ON THE VENDOR DOCK IN THE REAR OF THE BUILDING.
   - j. TENANT SHALL PROVIDE PRIVATE HAULING SERVICES FOR BOTH GARBAGE AND RECYCLABLES.
   - k. DUMPSTER FACILITIES SHALL BE BUILT TO TOWN AND OCSW STANDARDS. DETAILS OF THE PROPOSED DUMPSTER/RECYCLING FACILITIES WILL BE PLACED ON THE CONSTRUCTION PLANS.

PRELIMINARY
NOT FOR CONSTRUCTION

Pennoni
Firm License F-1267
PENNONI ASSOCIATES INC.
401 Providence Road #200
Chapel Hill, NC 27514
T 919.929.1173 F 919.493.6548

ALL DIMENSIONS MUST BE VERIFIED BY CONTRACTOR AND OWNER MUST BE NOTIFIED OF ANY DISCREPANCIES BEFORE PROCEEDING WITH WORK

NORTH CAROLINA REGISTERED PROFESSIONAL ENGINEER SEAL 042466 NILS J. BROMAN

PROPOSED GROCERY STORE
1814 DURHAM-CHAPEL HILL BLVD
CHAPEL HILL, NC 27514

GENERAL NOTES

LEON CAPITAL GROUP
5970 FAIRVIEW ROAD, SUITE 450
CHARLOTTE, NC 28210

NO.	DATE	REVISIONS	BY
3	5/03/2018	PER TOWN COMMENTS	SAK
2	3/30/2018	PER TOWN COMMENTS	JJB
1	2/23/18	PER TOWN COMMENTS	RLM

ALL DOCUMENTS PREPARED BY PENNONI ASSOCIATES ARE INSTRUMENTS OF SERVICE IN RESPECT OF THE PROJECT. THEY ARE NOT INTENDED OR REPRESENTED TO BE SUITABLE FOR REUSE BY OWNER OR OTHERS ON THE EXTENSIONS OF THE PROJECT OR ON ANY OTHER PROJECT. ANY REUSE WITHOUT WRITTEN VERIFICATION OR ADAPTATION BY PENNONI ASSOCIATES FOR THE SPECIFIC PURPOSE INTENDED WILL BE AT OWNERS SOLE RISK AND WITHOUT LIABILITY OR LEGAL EXPOSURE TO PENNONI ASSOCIATES; AND OWNER SHALL INDEMNIFY AND HOLD HARMLESS PENNONI ASSOCIATES FROM ALL CLAIMS, DAMAGES, LOSSES AND EXPENSES ARISING OUT OF OR RESULTING THEREFROM.

PROJECT	LCGR1601
DATE	2018-01-26
DRAWING SCALE	NTS
DRAWN BY	SAK
APPROVED BY	JJB

CS0003

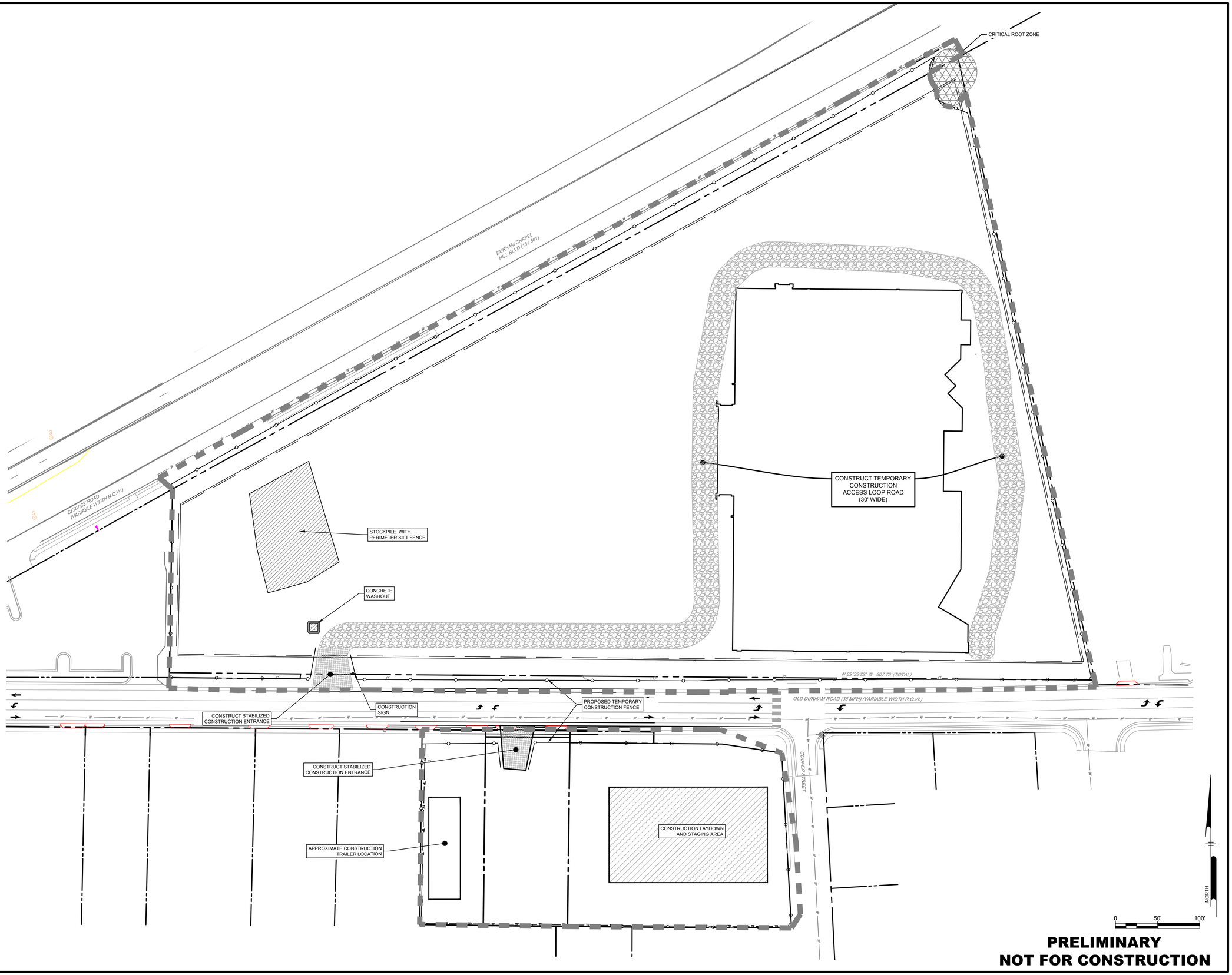

PRELIMINARY
NOT FOR CONSTRUCTION

P:\Projects\LCGROOM\LCGR1601-Grocery Site\DESIGN_PUBLISH\Phase 1\CS0500.dwg PLOTTED: 5/3/2018 3:39 PM, BY: Scott Krivelli PLOTSTYLE: Pennoni NCS.ctb PROJECT STATUS: PHASE 1

Pennoni
Firm Licenses: C-0187 F-1267
PENNONI ASSOCIATES INC.
401 Providence Road #200
Chapel Hill, NC 27514
T 919.929.1173 F 919.493.6548

ALL DIMENSIONS MUST BE VERIFIED BY CONTRACTOR AND OWNER MUST BE NOTIFIED OF ANY DISCREPANCIES BEFORE PROCEEDING WITH WORK

NORTH CAROLINA REGISTERED PROFESSIONAL ENGINEER J. JAMES BRANCH SEAL 042466

PROPOSED GROCERY STORE

1814 DURHAM-CHAPEL HILL BLVD
CHAPEL HILL, NC 27514

CONSTRUCTION MANAGEMENT PLAN

LEON CAPITAL GROUP
5970 FAIRVIEW ROAD, SUITE 450
CHARLOTTE, NC 28210

NO.	DATE	REVISIONS	BY
3	5/03/2018	PER TOWN COMMENTS	SAK
2	3/30/2018	PER TOWN COMMENTS	JJB
1	2/23/18	PER TOWN COMMENTS	RLM

ALL DOCUMENTS PREPARED BY PENNONI ASSOCIATES ARE INSTRUMENTS OF SERVICE IN RESPECT OF THE PROJECT. THEY ARE NOT INTENDED OR REPRESENTED TO BE SUITABLE FOR REUSE BY OWNER OR OTHERS ON THE EXTENSIONS OF THE PROJECT OR ON ANY OTHER PROJECT. ANY REUSE WITHOUT WRITTEN VERIFICATION OR ADAPTATION BY PENNONI ASSOCIATES FOR THE SPECIFIC PURPOSE INTENDED WILL BE AT OWNERS SOLE RISK AND WITHOUT LIABILITY OR LEGAL EXPOSURE TO PENNONI ASSOCIATES; AND OWNER SHALL INDEMNIFY AND HOLD HARMLESS PENNONI ASSOCIATES FROM ALL CLAIMS, DAMAGES, LOSSES AND EXPENSES ARSING OUT OF OR RESULTING THEREFROM.

PROJECT	LCGR1601
DATE	2018-01-26
DRAWING SCALE	1"= 50'
DRAWN BY	SAK
APPROVED BY	JJB

CS0500

SHEET 4 OF 10

GENERAL NOTES:

1. THIS PLAN REFERENCE DOCUMENTS AND INFORMATION BY:

   A.) TOPOGRAPHIC SURVEY, PREPARED BY PHILIP POST & ASSOCIATES, A DIVISION OF PENNONI
   401 PROVIDENCE ROAD, SUITE 200
   CHAPEL HILL, NC 27514
   FIELD DATE: 06/14/2016

   B.) OLD DURHAM ROAD IMPROVEMENT PLANS, TRANSFERRED FROM KIMLEY HORN AND ASSOCIATES, INC. VIA EMAIL TO OUR OFFICE ON 12/05/2017
   C.) ALTA/NSPS LAND TITLE SURVEY FOR 120 OLD DURHAM ROAD, BY FREEHOLD LAND SURVEYS, SIGNED JUNE 14, 2016

   D.) ALTA/NSPS LAND TITLE SURVEY FOR 126 OLD DURHAM ROAD, BY FREEHOLD LAND SURVEYS, SIGNED MAY 23, 2016

   E.) ORANGE COUNTY GIS INFORMATION

   F.) WATER & SANITARY SEWER INFORMATION BASED UPON VISIBLE EVIDENCE IN THE FIELD AT TIME OF SURVEY AND INFORMATION PROVIDED BY OWASA

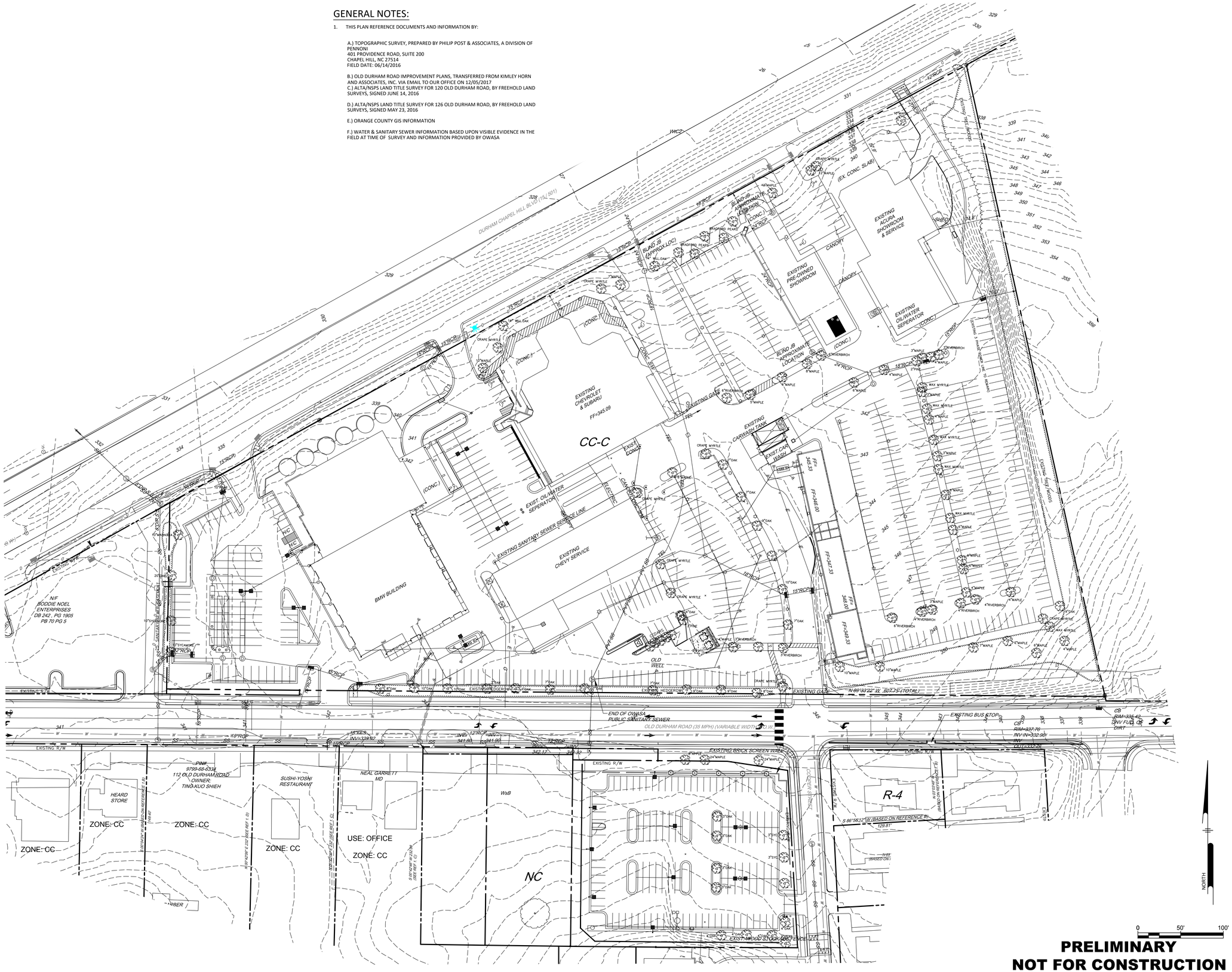

PRELIMINARY
NOT FOR CONSTRUCTION

Pennoni
Firm License F-1267
PENNONI ASSOCIATES INC.
401 Providence Road #200
Chapel Hill, NC 27514
T 919.929.1173 F 919.493.6548

ALL DIMENSIONS MUST BE VERIFIED BY CONTRACTOR AND OWNER MUST BE NOTIFIED OF ANY DISCREPANCIES BEFORE PROCEEDING WITH WORK

PROPOSED GROCERY STORE

1814 DURHAM-CHAPEL HILL BLVD
CHAPEL HILL, NC 27514

EXISTING CONDITION PLAN

LEON CAPITAL GROUP
5970 FAIRVIEW ROAD, SUITE 450
CHARLOTTE, NC 28210

DATE	NO.	REVISIONS	BY
5/03/2018	3	PER TOWN COMMENTS	SAK
3/30/2018	2	PER TOWN COMMENTS	JJB
2/23/18	1	PER TOWN COMMENTS	RLM

ALL DOCUMENTS PREPARED BY PENNONI ASSOCIATES ARE INSTRUMENTS OF SERVICE IN RESPECT OF THE PROJECT. THEY ARE NOT INTENDED OR REPRESENTED TO BE SUITABLE FOR REUSE BY OWNER OR OTHERS ON THE EXTENSIONS OF THE PROJECT OR ON ANY OTHER PROJECT. ANY REUSE WITHOUT WRITTEN VERIFICATION OR ADAPTATION BY PENNONI ASSOCIATES FOR THE SPECIFIC PURPOSE INTENDED WILL BE AT OWNERS SOLE RISK AND WITHOUT LIABILITY OR LEGAL EXPOSURE TO PENNONI ASSOCIATES; AND OWNER SHALL INDEMNIFY AND HOLD HARMLESS PENNONI ASSOCIATES FROM ALL CLAIMS, DAMAGES, LOSSES AND EXPENSES ARISING OUT OF OR RESULTING THEREFROM.

PROJECT	LCGR1601
DATE	2018-01-26
DRAWING SCALE	1"= 50'
DRAWN BY	SAK
APPROVED BY	JJB

CS0201

SHEET 5 OF 10

P:\Projects\LCGR\CIVIL\LCGR1601-Grocery Site\DESIGN_PUBLISH\Phase 1\CS0201.dwg PLOTTED: 5/3/2018 3:40 PM, BY: Scott Krcisell PLOTSTYLE: Pennoni NCS.ctb PROJECT STATUS: PHASE 1

SEQUENCE OF CONSTRUCTION:

THE TOWN OF CHAPEL HILL AND ORANGE COUNTY PLANNING & INSPECTION DEPARTMENT MUST BE NOTIFIED TO SCHEDULE A PRECONSTRUCTION MEETING PRIOR TO ANY EARTHMOVING ACTIVITY.

AFTER EACH RUNOFF EVENT, ALL TEMPORARY EROSION CONTROL FACILITIES SHALL BE CLEANED. ALL SILT REMOVED DURING THE CLEANING OPERATIONS SHALL BE INCORPORATED INTO THE EARTHWORK FILL OR WASTED ON THE SITE AS DIRECTED BY THE OWNER OR THEIR REPRESENTATIVE. EACH TASK MUST BE COMPLETED AND STABILIZED PRIOR TO COMMENCING THE NEXT TASK UNLESS NOTED.

ALL INGRESS TO AND EGRESS FROM THE SITE DURING CONSTRUCTION SHALL BE LIMITED TO THE CONSTRUCTION ENTRANCES FOR EACH AREA AS NOTED ON THE PLANS. IF ADDITIONAL POINTS OF ACCESS TO THE CONSTRUCTION SITE ARE REQUIRED, A TIRE CLEANING FACILITY MUST BE INSTALLED AND MAINTAINED.

ANY BMPs THAT ARE DISTURBED DURING CONSTRUCTION, AND PROPOSED GRADING OR UTILITY INSTALLATIONS SHOULD BE IMMEDIATELY REPAIRED AND RESTABILIZED.

ALL EARTH DISTURBANCE ACTIVITIES SHALL PROCEED IN ACCORDANCE WITH THE FOLLOWING SEQUENCE. EACH STAGE SHALL BE COMPLETED BEFORE ANY FOLLOWING STAGE IS INITIATED. CLEARING AND GRUBBING SHALL BE LIMITED TO ONLY THOSE AREAS DESCRIBED IN EACH STAGE.

THE OPERATOR SHALL REMOVE FROM THE SITE, RECYCLE OR DISPOSE OF ALL BUILDING MATERIALS AND WASTES IN ACCORDANCE WITH THE ORANGE COUNTY SOLID WASTE REGULATED RECYCLABLE MATERIALS ORDINANCE.

PHASE 1A CONSTRUCTION SEQUENCE

1. PRIOR TO GENERAL DEMOLITION ACTIVITIES, INSTALL STABILIZED CONSTRUCTION ENTRANCES AND CONSTRUCTION STAGING AREAS. BEGIN INSTALLATION OF CONSTRUCTION SIGNAGE; PERIMETER CONSTRUCTION FENCING, SILT FENCE AND TREE PROTECTION. INSTALL ALL INLET PROTECTION FACILITIES AS SHOWN ON THE PLAN, INCLUDING CLEARING THE DEBRIS WITHIN THE EXISTING INLET NEAR THE SOUTHEAST CORNER OF THE MAIN SITE THAT IS LOCATED WITHIN OLD DURHAM ROAD.
2. PERFORM UTILITY LOCATION AND EXCAVATE ALL TEST PITS. ALL EXISTING UTILITIES MUST BE LOCATED PRIOR TO COMMENCING ANY EARTH-MOVING ACTIVITIES.
3. BEGIN DEMOLITION OF EXISTING BUILDING AND STRUCTURES THAT ARE TO BE REMOVED. EXISTING UTILITIES THAT ARE NOT INTENDED FOR CONTINUED USE SHOULD EITHER BE REMOVED OR CAPPED AND ABANDONED IN PLACE IN ACCORDANCE WITH THE DIRECTIONS OF THE APPROPRIATE UTILITY COMPANY AND AS SHOWN ON THE DEMOLITION PLAN.
4. ONCE ALL BUILDINGS AND UTILITIES HAVE BEEN REMOVED AND/OR DEMOLISHED; PROCEED TO PHASE 1B

PHASE 1B CONSTRUCTION SEQUENCE

1. PRIOR TO ANY EARTH-MOVING ACTIVITIES, BEGIN INSTALLATION OF TEMPORARY SEDIMENT BASIN IN CONJUNCTION WITH THE REMOVAL OF THE EXISTING UNDERGROUND STORMWATER MANAGEMENT FACILITY. CONSTRUCTION SHALL INCLUDE THE TEMPORARY RISER STRUCTURE, POROUS BAFFLES AND SKIMMER DEVICE. ONCE THE SEDIMENT BASIN INSTALLATION IS COMPLETE, BEGIN INSTALLATION OF PERIMETER TEMPORARY DIVERSION CHANNELS. THIS INCLUDES TEMPORARY DRAINAGE PIPE BELOW THE CONSTRUCTION ENTRANCE. THE DIVERSION CHANNEL INSTALLATION SHALL INCLUDE IMMEDIATELY STABILIZING THE CHANNEL SIDES AND BOTTOM WITH EROSION CONTROL BLANKET. ANY CUT MATERIAL SHALL BE PLACED IN THE TEMPORARY STOCKPILE ONCE THE STOCKPILE SILT FENCE HAS BEEN INSTALLED.
2. INSTALL TEMPORARY DIVERSION DIKE ALONG SOUTHERN PROPERTY BOUNDARY WITHIN THE PARCELS THAT ARE LOCATED TO THE SOUTH OF OLD DURHAM ROAD. DIVERSION DIKE INSTALLATION SHALL INCLUDE IMMEDIATELY STABILIZING THE DIVERSION DIKE SIDES WITH EROSION CONTROL BLANKET.
3. BEGIN STRIPPING SITE OF THE EXISTING PAVEMENT AND SUBBASE MATERIAL (STOCKPILING IF MATERIAL IS TO BE REUSED). BEGIN ROUGH GRADING OF FUTURE PHASE PAVEMENT AND LANDSCAPE AREAS SUBBASE ELEVATIONS AS SHOWN ON THE PHASE ONE GRADING PLAN. ALL CUT AREAS SHALL BE ROTATED INTO FILL AREAS ON THE SITE OR TEMPORARY PLACED ON THE STOCKPILE FOR FUTURE USE. THIS WORK SHALL INCLUDE ROUGH GRADING OF THE BUILDING PAD AREA, INCLUDING THE GRAVEL WITHIN THE BUIDLING PAD FOR TENANT TURNOVER (SEE DETAIL ON DETAILS SHEET). STABILIZE SITE ONCE ROUGH GRADING IS COMPLETED, INCLUDING BUT STONE SUBBASE MATERIAL AND TEMPORARY STABILIZATION OF LANDSCAPE AREAS (SEE TEMPORARY STABILIZATION NOTES).
4. SITE STABILIZATION (AN AREA SHALL BE CONSIDERED TO HAVE ACHIEVED TEMPORARY STABILIZATION WHEN IT HAS A MINIMUM UNIFORM 70% PERENNIAL VEGETATIVE COVER OR OTHER PERMANENT NON-VEGETATIVE COVER WITH A DENSITY SUFFICIENT TO RESIST ACCELERATED SURFACE EROSION AND SUBSURFACE CHARACTERISTICS SUFFICIENT TO RESIST SLIDING OR OTHER MOVEMENTS).
5. UPON COMPLETION OF PHASE 1A AND PHASE 1B, CONTRACTOR CAN INITIATE PHASE 2 CONSTRUCTION STAGING. HAS NOT COMMENCED WITHIN 6 MONTHS OF COMPLETION, ADDITIONAL STORMWATER MANAGEMENT CONTROL MEASURES WILL BE REQUIRED TO BE PERMITTED AND INSTALLED IMMEDIATELY

GENERAL NOTES:

1. THIS PLAN REFERENCE DOCUMENTS AND INFORMATION BY:

A.) TOPOGRAPHIC SURVEY, PREPARED BY PHILIP POST & ASSOCIATES, A DIVISION OF PENNONI
401 PROVIDENCE ROAD, SUITE 200
CHAPEL HILL, NC 27514
FIELD DATE: 06/14/2016

B.) OLD DURHAM ROAD IMPROVEMENT PLANS, TRANSFERRED FROM KIMLEY HORN AND ASSOCIATES, INC. VIA EMAIL TO OUR OFFICE ON 12/05/2017
C.) ALTA/NSPS LAND TITLE SURVEY FOR 120 OLD DURHAM ROAD, BY FREEHOLD LAND SURVEYS, SIGNED JUNE 14, 2016

D.) ALTA/NSPS LAND TITLE SURVEY FOR 126 OLD DURHAM ROAD, BY FREEHOLD LAND SURVEYS, SIGNED MAY 23, 2016

E.) ORANGE COUNTY GIS INFORMATION

F.) WATER & SANITARY SEWER INFORMATION BASED UPON VISIBLE EVIDENCE IN THE FIELD AT TIME OF SURVEY AND INFORMATION PROVIDED BY OWASA

DEMOLITION NOTES:

1. ALL EXISTING SITE IMPROVEMENTS ON THE MAIN LOT INCLUDING BUT NOT LIMITED TO UTILITY LINES (ABOVE AND BELOW GRADE), UTILITY STRUCTURES (MANHOLES, VALVES, POLES, ETC.), DRAINAGE STRUCTURES (MANHOLES, INLETS, PIPING, ETC.) SHALL BE REMOVED UNLESS OTHERWISE NOTED.

LEGEND:

- CONSTRUCTION FENCE
- SILTATION DIVIDE
- SF — SILT FENCE
- TP — TREE PROTECTION FENCE
- IP — INLET PROTECTION
- SFO — SILT FENCE OPENING
- EROSION CONTROL MATTING

DEMOLITION LEGEND:

- TREE TO BE REMOVED
- (TBRBO) — TO BE REMOVED BY OTHERS
- (TBR) — TO BE REMOVED

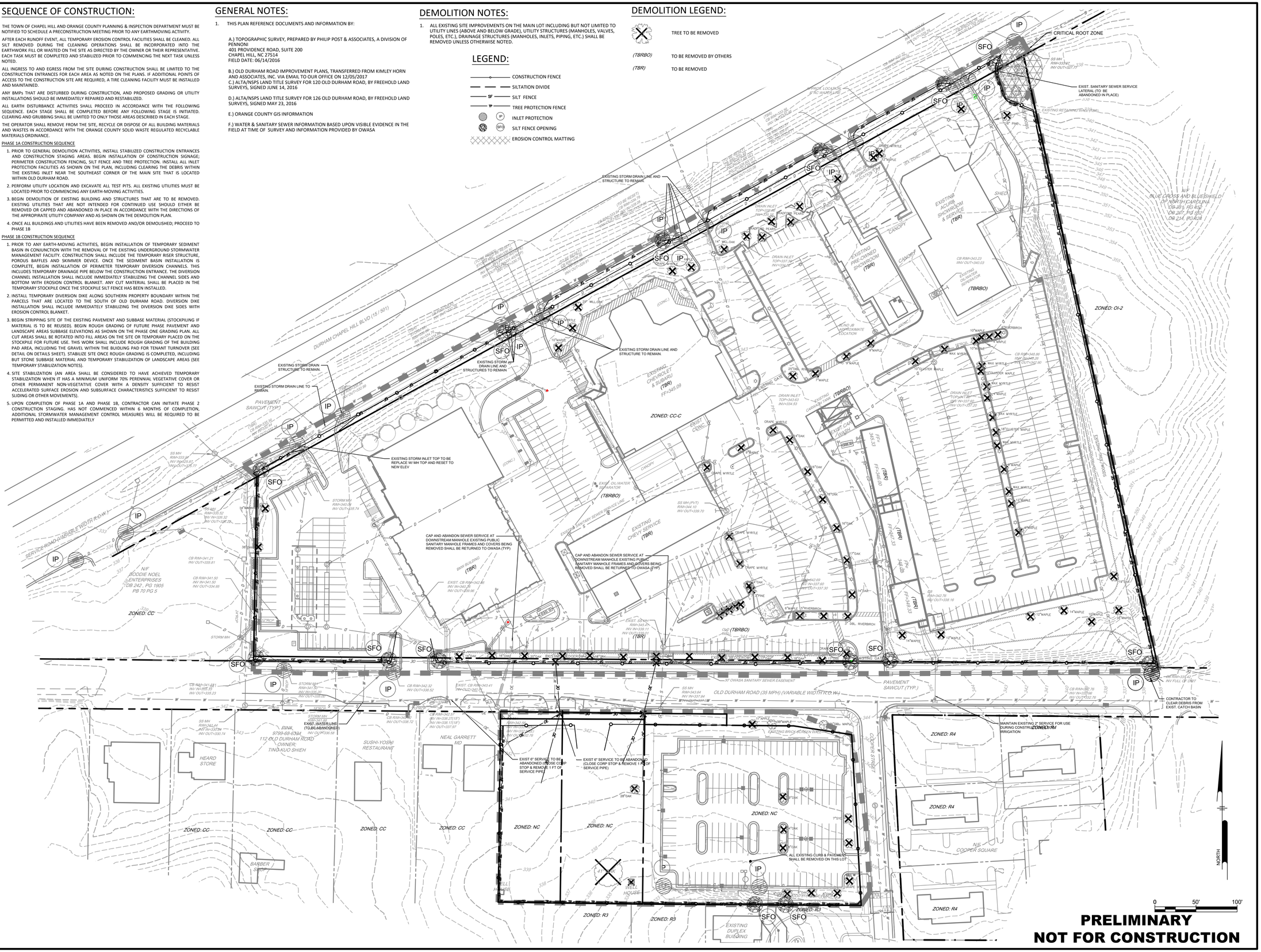

PRELIMINARY
NOT FOR CONSTRUCTION

Pennoni
Firm License F-1267
PENNONI ASSOCIATES INC.
401 Providence Road #200
Chapel Hill, NC 27514
T 919.929.1173 F 919.493.6548

ALL DIMENSIONS MUST BE VERIFIED BY CONTRACTOR AND OWNER MUST BE NOTIFIED OF ANY DISCREPANCIES BEFORE PROCEEDING WITH WORK

NORTH CAROLINA REGISTERED PROFESSIONAL ENGINEER SEAL 042456 JAMES BROWN

PROPOSED GROCERY STORE

1814 DURHAM-CHAPEL HILL BLVD
CHAPEL HILL, NC 27514

DEMOLITION PLAN

LEON CAPITAL GROUP
5970 FAIRVIEW ROAD, SUITE 450
CHARLOTTE, NC 28210

DATE	NO.	REVISIONS	BY
5/03/2018	3	PER TOWN COMMENTS	SAK
3/30/2018	2	PER TOWN COMMENTS	JJB
2/23/18	1	PER TOWN COMMENTS	RLM

ALL DOCUMENTS PREPARED BY PENNONI ASSOCIATES ARE INSTRUMENTS OF SERVICE IN RESPECT OF THE PROJECT. THEY ARE NOT INTENDED OR REPRESENTED TO BE SUITABLE FOR REUSE BY OWNER OR OTHERS ON THE EXTENSIONS OF THE PROJECT OR ON ANY OTHER PROJECT. ANY REUSE WITHOUT WRITTEN VERIFICATION OR ADAPTATION BY PENNONI ASSOCIATES FOR THE SPECIFIC PURPOSE INTENDED WILL BE AT OWNERS SOLE RISK AND WITHOUT LIABILITY OR LEGAL EXPOSURE TO PENNONI ASSOCIATES; AND OWNER SHALL INDEMNIFY AND HOLD HARMLESS PENNONI ASSOCIATES FROM ALL CLAIMS, DAMAGES, LOSSES AND EXPENSES ARISING OUT OF OR RESULTING THEREFROM.

PROJECT	LCGR1601
DATE	2018-01-26
DRAWING SCALE	1"= 50'
DRAWN BY	SAK
APPROVED BY	JJB

CS0501

SHEET 6 OF 10

P:\Projects\LCGRCOM\LCGR1601-Cooper_Site\DESIGN_PUBLISH\Phase 1\CS0501.dwg PLOTTED: 5/7/2018 8:09 AM BY: Justin Brown PLOTSTYLE: Pennoni.NCS.ctb PROJECT STATUS: PHASE 1

SEQUENCE OF CONSTRUCTION:

THE TOWN OF CHAPEL HILL AND ORANGE COUNTY PLANNING & INSPECTION DEPARTMENT MUST BE NOTIFIED TO SCHEDULE A PRECONSTRUCTION MEETING PRIOR TO ANY EARTHMOVING ACTIVITY.

AFTER EACH RUNOFF EVENT, ALL TEMPORARY EROSION CONTROL FACILITIES SHALL BE CLEANED. ALL SILT REMOVED DURING THE CLEANING OPERATIONS SHALL BE INCORPORATED INTO THE EARTHWORK FILL OR WASTED ON THE SITE AS DIRECTED BY THE OWNER OR THEIR REPRESENTATIVE. EACH TASK MUST BE COMPLETED AND STABILIZED PRIOR TO COMMENCING THE NEXT TASK UNLESS NOTED.

ALL INGRESS TO AND EGRESS FROM THE SITE DURING CONSTRUCTION SHALL BE LIMITED TO THE CONSTRUCTION ENTRANCES FOR EACH AREA AS NOTED ON THE PLANS. IF ADDITIONAL POINTS OF ACCESS TO THE CONSTRUCTION SITE ARE REQUIRED, A TIRE CLEANING FACILITY MUST BE INSTALLED AND MAINTAINED.

ANY BMPs THAT ARE DISTURBED DURING CONSTRUCTION, AND PROPOSED GRADING OR UTILITY INSTALLATIONS SHOULD BE IMMEDIATELY REPAIRED AND RESTABILIZED.

ALL EARTH DISTURBANCE ACTIVITIES SHALL PROCEED IN ACCORDANCE WITH THE FOLLOWING SEQUENCE. EACH STAGE SHALL BE COMPLETED BEFORE ANY FOLLOWING STAGE IS INITIATED. CLEARING AND GRUBBING SHALL BE LIMITED TO ONLY THOSE AREAS DESCRIBED IN EACH STAGE.

THE OPERATOR SHALL REMOVE FROM THE SITE, RECYCLE OR DISPOSE OF ALL BUILDING MATERIALS AND WASTES IN ACCORDANCE WITH THE ORANGE COUNTY SOLID WASTE REGULATED RECYCLABLE MATERIALS ORDINANCE.

PHASE 1A CONSTRUCTION SEQUENCE

1. PRIOR TO GENERAL DEMOLITION ACTIVITIES, INSTALL STABILIZED CONSTRUCTION ENTRANCES AND CONSTRUCTION STAGING AREAS. BEGIN INSTALLATION OF CONSTRUCTION SIGNAGE; PERIMETER CONSTRUCTION FENCING, SILT FENCE AND TREE PROTECTION. INSTALL ALL INLET PROTECTION FACILITIES AS SHOWN ON THE PLAN, INCLUDING CLEARING THE DEBRIS WITHIN THE EXISTING INLET NEAR THE SOUTHEAST CORNER OF THE MAIN SITE THAT IS LOCATED WITHIN OLD DURHAM ROAD.
2. PERFORM UTILITY LOCATION AND EXCAVATE ALL TEST PITS. ALL EXISTING UTILITIES MUST BE LOCATED PRIOR TO COMMENCING ANY EARTH-MOVING ACTIVITIES.
3. BEGIN DEMOLITION OF EXISTING BUILDING AND STRUCTURES THAT ARE TO BE REMOVED. EXISTING UTILITIES THAT ARE NOT INTENDED FOR CONTINUED USE SHOULD EITHER BE REMOVED OR CAPPED AND ABANDONED IN PLACE IN ACCORDANCE WITH THE DIRECTIONS OF THE APPROPIRATE UTILITY COMPANY AND AS SHOWN ON THE DEMOLITION PLAN.
4. ONCE ALL BUILDINGS AND UTILITIES HAVE BEEN REMOVED AND/OR DEMOLISHED; PROCEED TO PHASE 1B

PHASE 1B CONSTRUCTION SEQUENCE

1. PRIOR TO ANY EARTH-MOVING ACTIVITIES, BEGIN INSTALLATION OF TEMPORARY SEDIMENT BASIN IN CONIJUNCTION WITH THE REMOVAL OF THE EXISTING UNDERGROUND STORMWATER MANAGEMENT FACILITY. CONSTRUCTION SHALL INCLUDE THE TEMPORARY RISER STRUCTURE, POROUS BAFFLES AND SKIMMER DEVICE. ONCE THE SEDIMENT BASIN INSTALLATION IS COMPLETE, BEGIN INSTALLATION OF PERIMETER TEMPORARY DIVERSION CHANNELS. THIS INCLUDES TEMPORARY DRAINAGE PIPE BELOW THE CONSTRUCTION ENTRANCE. THE DIVERSION CHANNEL INSTALLATION SHALL INCLUDE IMMEDIATELY STABILIZING THE CHANNEL SIDES AND BOTTOM WITH EROSION CONTROL BLANKET. ANY CUT MATERIAL SHALL BE PLACED IN THE TEMPORARY STOCKPILE ONCE THE STOCKPILE SILT FENCE HAS BEEN INSTALLED.
2. INSTALL TEMPORARY DIVERSION DIKE ALONG SOUTHERN PROPERTY BOUNDARY WITHIN THE PARCELS THAT ARE LOCATED TO THE SOUTH OF OLD DURHAM ROAD. DIVERSION DIKE INSTALLATION SHALL INCLUDE IMMEDIATELY STABILIZING THE DIVERSION DIKE SIDES WITH EROSION CONTROL BLANKET.
3. BEGIN STRIPPING SITE OF THE EXISTING PAVEMENT AND SUBBASE MATERIAL (STOCKPILING IF MATERIAL IS TO BE REUSED). BEGIN ROUGH GRADING OF FUTURE PHASE PAVEMENT AND LANDSCAPE AREAS SUBBASE ELEVATIONS AS SHOWN ON THE PHASE ONE GRADING PLAN. ALL CUT AREAS SHALL BE ROTATED INTO FILL AREAS ON THE SITE OR TEMPORARY PLACED ON THE STOCKPILE FOR FUTURE USE. THIS WORK SHALL INCLUDE ROUGH GRADING OF THE BUILDING PAD AREA, INCLUDING THE GRAVEL WITHIN THE BUIDLING PAD FOR TENANT TURNOVER (SEE DETAIL ON DETAILS SHEET). STABILIZE SITE ONCE ROUGH GRADING IS COMPLETED, INCLUDING BUT STONE SUBBASE MATERIAL AND TEMPORARY STABILIZATION OF LANDSCAPE AREAS (SEE TEMPORARY STABILIZATION NOTES).
4. SITE STABILIZATION (AN AREA SHALL BE CONSIDERED TO HAVE ACHIEVED TEMPORARY STABILIZATION WHEN IT HAS A MINIMUM UNIFORM 70% PERENNIAL VEGETATIVE COVER OR OTHER PERMANENT NON-VEGETATIVE COVER WITH A DENSITY SUFFICIENT TO RESIST ACCELERATED SURFACE EROSION AND SUBSURFACE CHARACTERISTICS SUFFICIENT TO RESIST SLIDING OR OTHER MOVEMENTS).
5. UPON COMPLETION OF PHASE 1A AND PHASE 1B, CONTRACTOR CAN INITIATE PHASE 2 CONSTRUCTION STAGING. HAS NOT COMMENCED WITHIN 6 MONTHS OF COMPLETION, ADDITIONAL STORMWATER MANAGEMENT CONTROL MEASURES WILL BE REQUIRED TO BE PERMITTED AND INSTALLED IMMEDIATELY

LEGEND:

- CONSTRUCTION FENCE
- SILTATION DIVIDE
- SILT FENCE
- TREE PROTECTION FENCE
- INLET PROTECTION
- SILT FENCE OPENING
- EROSION PROTECTION MATTING
- DIVERSION DIKE

GENERAL NOTES:

1. THIS PLAN REFERENCE DOCUMENTS AND INFORMATION BY:

   A.) TOPOGRAPHIC SURVEY, PREPARED BY PHILIP POST & ASSOCIATES, A DIVISION OF PENNONI
   401 PROVIDENCE ROAD, SUITE 200
   CHAPEL HILL, NC 27514
   FIELD DATE: 06/14/2016

   B.) OLD DURHAM ROAD IMPROVEMENT PLANS, TRANSFERRED FROM KIMLEY HORN AND ASSOCIATES, INC. VIA EMAIL TO OUR OFFICE ON 12/05/2017

   C.) ORANGE COUNTY GIS INFORMATION

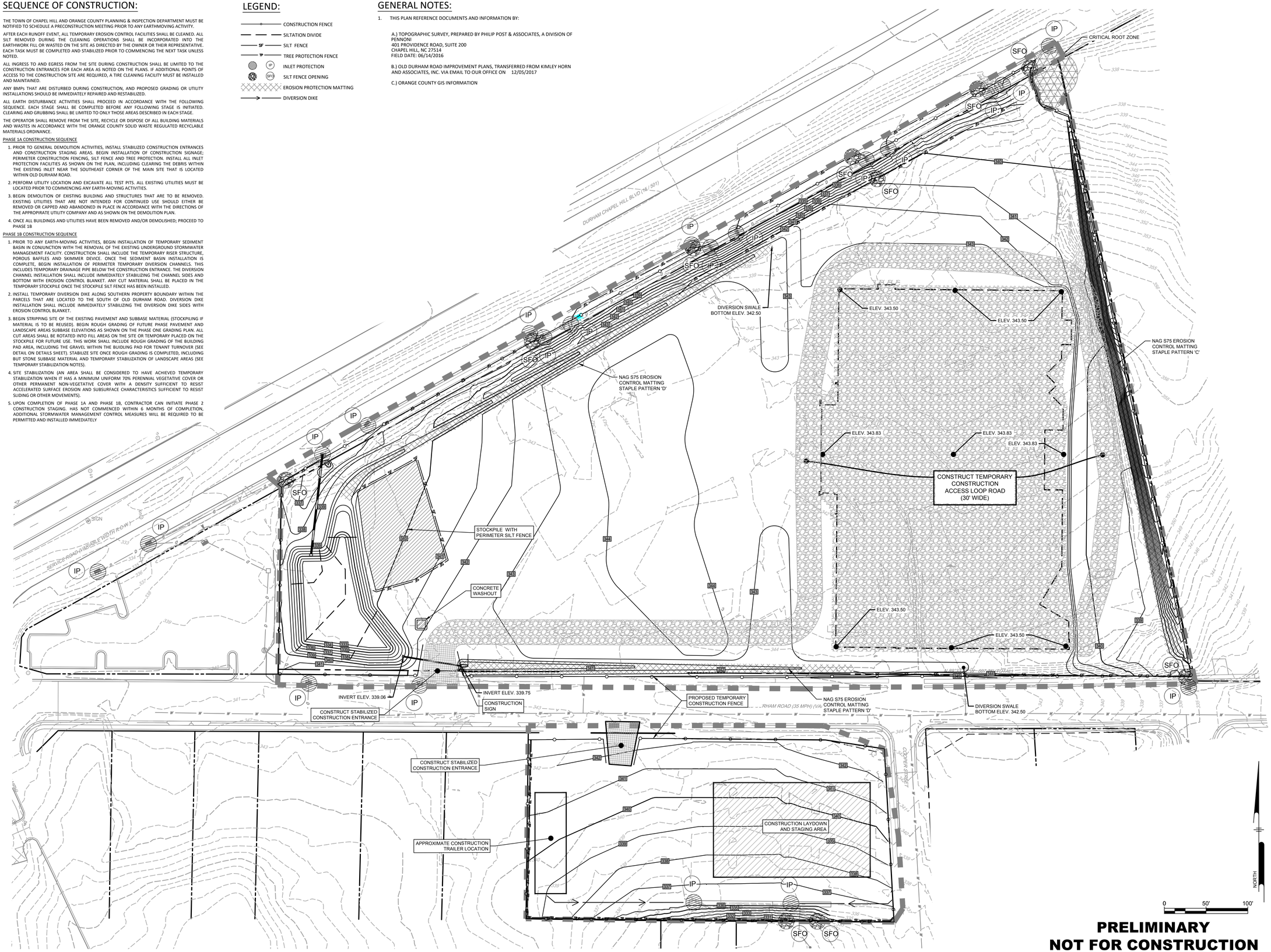

PRELIMINARY
NOT FOR CONSTRUCTION

Pennoni
Firm License F-1267
PENNONI ASSOCIATES INC.
401 Providence Road #200
Chapel Hill, NC 27514
T 919.929.1173 F 919.493.6548

ALL DIMENSIONS MUST BE VERIFIED BY CONTRACTOR AND OWNER MUST BE NOTIFIED OF ANY DISCREPANCIES BEFORE PROCEEDING WITH WORK

NORTH CAROLINA REGISTERED PROFESSIONAL ENGINEER SEAL 042456 SAM J. BROWN

PROPOSED GROCERY STORE

1814 DURHAM-CHAPEL HILL BLVD
CHAPEL HILL, NC 27514

PHASE ONE GRADING PLAN

LEON CAPITAL GROUP
5970 FAIRVIEW ROAD, SUITE 450
CHARLOTTE, NC 28210

NO.	DATE	REVISIONS	BY
3	5/03/2018	PER TOWN COMMENTS	SAK
2	3/30/2018	PER TOWN COMMENTS	JJB
1	2/23/18	PER TOWN COMMENTS	RLM

ALL DOCUMENTS PREPARED BY PENNONI ASSOCIATES ARE INSTRUMENTS OF SERVICE IN RESPECT OF THE PROJECT. THEY ARE NOT INTENDED OR REPRESENTED TO BE SUITABLE FOR REUSE BY OWNER OR OTHERS ON THE EXTENSIONS OF THE PROJECT OR ON ANY OTHER PROJECT. ANY REUSE WITHOUT WRITTEN VERIFICATION OR ADAPTATION BY PENNONI ASSOCIATES FOR THE SPECIFIC PURPOSE INTENDED WILL BE AT OWNERS SOLE RISK AND WITHOUT LIABILITY OR LEGAL EXPOSURE TO PENNONI ASSOCIATES; AND OWNER SHALL INDEMNIFY AND HOLD HARMLESS PENNONI ASSOCIATES FROM ALL CLAIMS, DAMAGES, LOSSES AND EXPENSES ARISING OUT OF OR RESULTING THEREFROM.

PROJECT	LCGR1601
DATE	2018-01-26
DRAWING SCALE	1"= 50'
DRAWN BY	SAK
APPROVED BY	JJB

CS1501

SHEET 7 OF 10

P:\Projects\LCGROOM\LCGR1601-Grocery Site\DESIGN_PUBLISH\Phase 1\CS1501.dwg PLOTTED: 5/3/2018 3:50 PM, BY: Scott Knowitt PLOTSTYLE: Pennoni.NCS.ctb PROJECT STATUS: PHASE 1

NOTES:

1. ALL ON-SITE TOPSOIL MUST BE PRESERVED FOR REUSE ON THE SITE DURING REVEGETATION, UNLESS IT IS INFEASIBLE OR UNREASONABLE TO DO SO. (NOTE: TOPSOIL STOCKPILING ON-SITE MAY BE INFEASIBLE IF SPACE IS NOT AVAILABLE ON-SITE FOR TOPSOIL STOCKPILING OR IF LITTLE TO NO VEGETATION IS TO REMAIN UNDER POST-CONSTRUCTION CONDITIONS.).
2. ALL SOIL STOCKPILES MUST BE STABILIZED TO PREVENT EROSION AND FUGITIVE DUST. THE SURFACE OF THE STOCKPILE MUST BE PROPERLY PROTECTED TO ELIMINATE THE RISK OF EROSION. SEE TEMPORARY SEEDING OR STABILIZATION DETAIL. SUITABLE ALTERNATIVE MEANS OF STABILIZATION CAN BE USED, SUCH AS PROPERLY ANCHORED PLASTIC TARPS.
3. PERIMETER SEDIMENT CONTROLS ALSO MUST BE INSTALLED AT STOCKPILE LOCATIONS TO PREVENT CONTACT WITH STORMWATER, INCLUDING RUN-ON.
4. STOCKPILES MUST BE LOCATED OUTSIDE OF ANY VEGETATED BUFFER AREAS AND SHOULD BE LOCATED AS FAR AS PRACTICABLE FROM STORMWATER CONVEYANCES AND IMPOUNDMENTS AND WATER BODIES.
5. STOCKPILE LOCATIONS SHALL BE NOTED ON THE SITE MAPS.

STOCKPILES

NOTES:

1. LARGE AREAS OF SOIL THAT ARE DENUDED OF VEGETATION AND HAVE NO PROTECTION FROM PARTICLES BEING PICKED UP AND CARRIED BY WIND SHOULD BE PROTECTED WITH A TEMPORARY COVER OR KEPT UNDER CONTROL WITH WATER OR OTHER SOIL ADHERING PRODUCTS TO PREVENT SOIL PARTICLES FROM BECOMING AIRBORNE, AND FROM EXITING THE SITE PERIMETER.

WATER TRUCKS OR OTHER DUST CONTROL AGENTS SHALL BE USED AS NEEDED DURING CONSTRUCTION TO MINIMIZE DUST GENERATED ON THE SITE. TACKIFIERS MAY BE USED TO HOLD SOIL IN PLACE AND PREVENT DUST. MANUFACTURER RECOMMENDATIONS FOR APPLICATION LOCATIONS AND RATES MUST BE USED FOR DUST CONTROL APPLICATIONS.

2. DUST CONTROL MUST BE PROVIDED BY THE GC TO A DEGREE THAT IS IN COMPLIANCE WITH APPLICABLE FEDERAL, LOCAL AND STATE DUST CONTROL REGULATIONS.
3. THE USE OF MOTOR OILS AND OTHER PETROLEUM BASED OR TOXIC LIQUIDS FOR DUST SUPPRESSION OPERATIONS IS PROHIBITED.
4. IN ADDITION TO BMPS, GC SHALL PERFORM PER PRACTICES AND PROCEDURES WHICH MINIMIZE AND PREVENT AIRBORNE DUST OR OTHER PARTICLES FROM OCCURRING.

DUST CONTROL

NOTES:

1. MATERIAL STORAGE AREAS SHOULD BE LOCATED, WHEN POSSIBLE, TO MINIMIZE EXPOSURE TO WEATHER. INSPECTIONS SHALL EVALUATE DISTURBED AREAS AND AREAS USED FOR STORING MATERIALS THAT ARE EXPOSED TO RAINFALL FOR EVIDENCE OF, OR THE POTENTIAL FOR, POLLUTANTS ENTERING THE DRAINAGE SYSTEM OR DISCHARGING FROM THE SITE. IF NECESSARY, THE MATERIALS MUST BE COVERED OR ORIGINAL COVERS MUST BE REPAIRED OR SUPPLEMENTED. ALSO, PROTECTIVE BERMS MUST BE CONSTRUCTED, IF NEEDED, TO CONTAIN RUNOFF FROM MATERIAL STORAGE AREAS. GC SHALL ADHERE TO ALL STATE AND LOCAL REGULATIONS PERTAINING TO MATERIAL STORAGE AREAS.
2. CHEMICALS, PAINTS, SOLVENTS, FERTILIZERS, AND OTHER TOXIC MATERIALS MUST BE STORED IN WATERPROOF CONTAINERS. EXCEPT DURING APPLICATION, THE CONTAINERS AND THE CONTENTS MUST BE KEPT IN TRUCKS OR INSIDE OF STORAGE FACILITIES. RUNOFF CONTAINING SUCH MATERIAL MUST BE COLLECTED, REMOVED FROM THE SITE, TREATED, AND DISPOSED OF AT AN APPROVED SOLID WASTE AND CHEMICAL DISPOSAL FACILITY.

MATERIAL LAYDOWN AND STORAGE AREA

NOTES:

1. CONCRETE WASTE MANAGEMENT PERTAINS TO WASTE FROM CONCRETE READY-MIX TRUCKS, MASONRY OPERATIONS, AND SIMILAR WASTE.
2. DISCHARGE OF EXCESS OR WASTE CONCRETE AND/OR WASH WATER FROM CONCRETE TRUCKS IS ALLOWED AT THE CONSTRUCTION SITE. ONLY COMMERCIALLY AVAILABLE ABOVE GROUND PORTABLE CONCRETE WASHOUT CONTAINERS ARE ALLOWED AND MUST BE PROTECTED FROM VEHICLE TRAFFIC AND CLEARLY IDENTIFIED BY LEGIBLE SIGNAGE, AND MUST BE LOCATED OUTSIDE OF VEGETATED BUFFERS AND AS FAR AS PRACTICABLE FROM STORMWATER CONVEYANCES AND IMPOUNDMENTS AND WATER BODIES. PORTABLE CONCRETE WASHOUT CONTAINERS SHALL CONTAIN AND/OR ACTIVELY MANAGE BOTH, SOLID AND FLUID, COMPONENTS OF THE MIX. CONCRETE WASHOUT CONTAINERS MUST BE CLEANED OR EXCHANGED WHEN THE REMAINING VOLUME IS REDUCED BY 85% TO PREVENT ANY POTENTIAL OVERFLOW IN A STORM EVENT.
3. ALTERNATIVELY, WASTE CONCRETE CAN BE PLACED INTO FORMS TO MAKE RIP RAP AND/OR OTHER USEFUL CONCRETE PRODUCTS. PORTABLE CONCRETE WASHOUT CONTAINERS SHALL BE DISPOSED IN ACCORDANCE WITH APPLICABLE LOCAL, STATE AND FEDERAL REGULATIONS. THE GC IS RESPONSIBLE FOR ASSURING THAT THESE PROCEDURES, APPLICABLE LAWS, AND ENVIRONMENTAL REGULATIONS ARE FOLLOWED. THE LOCATION OF CONCRETE WASHOUT CONTAINERS SHALL BE SHOWN ON THE SITE MAPS.

CEMENT AND CONCRETE WASHOUT

NOTES:

1. SUBSTANCES THAT HAVE THE POTENTIAL FOR POLLUTING SURFACE AND/OR GROUNDWATER MUST BE CONTROLLED BY ANY MEANS NECESSARY TO ENSURE THAT THOSE DO NOT DISCHARGE FROM THE SITE. IN THIS REGARD, POTENTIALLY POLLUTING SUBSTANCES SHALL BE STORED AND HANDLED IN A MANNER CONSISTENT WITH THE RISK OF IMPACT THOSE REPRESENT, AND ACCORDING WITH THE REGULATIONS.
2. NO SOLID MATERIALS, INCLUDING BUILDING MATERIALS, ARE ALLOWED TO BE DISCHARGED FROM THE SITE WITH STORMWATER. ALL SOLID WASTE, INCLUDING DISPOSABLE MATERIALS INCIDENTAL TO THE CONSTRUCTION ACTIVITIES, MUST BE COLLECTED AND PLACED IN CONTAINERS. RUBBISH, TRASH, GARBAGE, LITTER, OR OTHER SUCH MATERIALS SHALL BE DEPOSITED INTO SEALED CONTAINERS. MATERIALS SHALL BE PREVENTED FROM LEAVING THE PREMISES THROUGH THE ACTION OF WIND OR STORMWATER DISCHARGE INTO DRAINAGE DITCHES OR WATERS OF THE STATE. THE CONTAINERS SHALL BE HAULED AWAY FROM THE SITE AND EMPTIED WHEN THOSE BECOME 95% FULL, OR AS NECESSARY, BY A CERTIFIED TRASH DISPOSAL SERVICE. LIDS OR COVERS FOR THE CONTAINERS SHALL BE PROVIDED FOR USE DURING RAIN EVENTS TO PREVENT WASTE CONTACT WITH STORMWATER. WASTES THAT CANNOT BE STORED IN A CONTAINER MUST BE STORED UNDER COVER OR INDOORS. THE LOCATION OF SOLID WASTE RECEPTACLES SHALL BE SHOWN ON THE SITE MAPS.

SOLID WASTE DISPOSAL

NOTES:

1. CONTRACTOR SHALL PROVIDE DESIGNATED LOCATION FOR SORTING AND SEPARATING HAZARDOUS WASTES.
2. HAZARDOUS WASTE STORAGE MUST BE PROTECTED FROM WEATHER ELEMENTS AND HAVE RESTRICTED ACCESS.
3. HAZARDOUS WASTE STORAGE MUST COMPLY WITH LOCAL, STATE, AND FEDERAL REGULATIONS.
4. HAZARDOUS WASTE STORAGE MUST COMPLY WITH CONTRACT DOCUMENTS.

HAZARDOUS WASTE DISPOSAL

NOTES:

1. ALL PERSONNEL INVOLVED WITH CONSTRUCTION ACTIVITIES MUST COMPLY WITH STATE AND LOCAL SANITARY OR SEPTIC SYSTEM REGULATIONS. PORTABLE TOILETS MUST BE LOCATED AT LEAST 30 FEET FROM INLETS, CHANNELS, SWALES, OR PERMITTED LIMITS OF DISTURBANCE, AND MUST BE LOCATED AT LEAST 50 FEET FROM WATERS OF THE STATE, OR WATERS OF THE U.S.. PORTABLE TOILETS MUST BE SECURELY ANCHORED AND/OR TIED DOWN. SECONDARY CONTAINMENT SHALL BE PROVIDED AND FULL CAPACITY SHALL BE RESTORED IMMEDIATELY UPON DISCOVERY OF ITS DIMINISHMENT. THE LOCATION OF SANITARY FACILITIES SHALL BE SHOWN ON THE SITE MAPS.

SANITARY FACILITIES

NOTES:

1. USING WATER FROM BASINS, TRAPS, TANKS, OR OTHER WATER CONTAINMENT AREAS FOR IRRIGATION MINIMIZES DISCHARGES FROM THE SITE, AND IT MAY SATISFY OTHER NEEDS OF THE CONSTRUCTION PROJECT, SUCH AS DUST CONTROL, VEGETATIVE ESTABLISHMENT, ETC.
2. CARE SHOULD BE TAKEN THAT WATER UTILIZED FROM CONTAINMENT AREAS ON-SITE FOR CONSTRUCTION PURPOSES DOES NOT DISCHARGE OFF-SITE. IF DISCHARGE IS ANTICIPATED OR OBSERVED, DEWATERING PROCEDURES STATED IN THE DEWATERING DETAIL MUST BE FOLLOWED.
3. GC SHALL IMPLEMENT IRRIGATION OR DISPERSION AS PRACTICABLE TO REDUCE WATER VOLUME IN IMPOUNDMENTS AND TO FOSTER VEGETATION GROWTH.

IRRIGATION OR DISPERSION

NOTES:

1. STORM DRAIN INLET PROTECTION MEASURES SHALL PREVENT SOIL AND DEBRIS FROM ENTERING STORM DRAIN INLETS.
2. TEMPORARY CONTROLS SHALL BE CONSTRUCTED BEFORE THE SURROUNDING AREA IS DISTURBED.
3. TO PREVENT CLOGGING, STORM DRAIN CONTROL STRUCTURES MUST BE MAINTAINED FREQUENTLY.
4. CHECK ALL TEMPORARY CONTROL MEASURES DAILY, AND AFTER EACH STORM EVENT.
5. CONTROL MEASURES MUST BE BUILT PER DETAIL AND PLANS, AND MUST BE IN GOOD WORKING CONDITION AT ALL TIMES.

INLET PROTECTION

NOTES:

1. THE GC SHALL IDENTIFY MASONS' AREA WITH LEGIBLE SIGNAGE ON THE SITE. TO THE EXTENT PRACTICAL, ALL MASONRY TOOLS, MATERIAL, INCLUDING SAND AND SACKED CEMENT AND/OR MORTAR MATERIALS, MIX, AND EQUIPMENT SHALL BE LOCATED WITHIN THE AREA IDENTIFIED. MATERIALS VULNERABLE TO WEATHER ELEMENTS SHALL BE STORED IN CONTAINERS AT THE END OF EACH WORK DAY; SUCH MATERIALS SHALL REMAIN STORED IN CONTAINERS WHEN NOT IN USE.
2. RUNOFF CONTROL, SUCH AS DIVERSION BERMS, SILT FENCE, SILT DIKE, OR OTHER MEANS OF CONTAINMENT SHALL BE PROVIDED TO PREVENT THE MIGRATION OF STORMWATER POLLUTANTS FROM THE MASONS' AREA. COVERED RECEPTACLES FOR DEBRIS AND TRASH DISPOSAL SHALL ALSO BE PROVIDED.
3. THE MASONS' AREA SHALL MEET OSHA AND OTHER REGULATORY REQUIREMENTS FOR PERSONAL PROTECTIVE EQUIPMENT (PPE), FIRE EXTINGUISHERS, ETC. GC SHALL PROVIDE SCREENING OR OTHER TECHNOLOGIES FOR MASONS' AREA TO PREVENT AIRBORNE TRANSPORT OF CEMENT DUST AND OTHER PARTICULATES DUE TO HIGH SPEED WIND OR OTHER CONDITIONS. THE LOCATION OF THE MASONS' AREA SHALL BE SHOWN ON THE SITE MAPS.

MASONS' AREA

NOTES:

1. VERIFY WITH ENGINEER AND AUTHORITY HAVING JURISDICTION WHICH DISCHARGES FROM DEWATERING ACTIVITIES ARE ALLOWED OR ARE NOT ALLOWED NON-STORMWATER DISCHARGES UNDER THE GENERAL PERMIT AND OTHER REGULATIONS. OBTAIN ALL DEWATERING PERMITS AND AUTHORIZATIONS REQUIRED BY STATE AND LOCAL REGULATIONS.
2. GC MUST WAIT TO HAVE WRITTEN COPY OF ALL REQUIRED DEWATERING PERMITS AND AUTHORIZATIONS BEFORE PERFORMING DEWATERING ACTIVITIES.
3. DISCHARGES FROM DEWATERING OPERATIONS MUST BE DIRECTED THROUGH AN APPROPRIATE POLLUTION PREVENTION/TREATMENT SYSTEM OF CONTROL MEASURES, SUCH AS A SEDIMENT/FILTER BAG, SEDIMENT TRAP OR SEDIMENT BASIN, AND OTHERS, AS NEEDED, PRIOR TO BEING DISCHARGED FROM THE SITE OR INTO A WATER BODY OF THE STATE. UNDER NO CIRCUMSTANCES ARE DISCHARGES FROM DEWATERING OPERATIONS TO BE DISCHARGED DIRECTLY INTO SANITARY SEWER SYSTEMS, STREAMS, RIVERS, LAKES OR OTHER AREAS BEYOND THE PERMITTED PROJECT AREA. LIKEWISE, DISCHARGES INTO STORM SEWER SYSTEMS THAT DO NOT DRAIN TO A SUITABLE ON-SITE TREATMENT FACILITY, SUCH AS A BASIN, ARE ALSO PROHIBITED. DISCHARGES FROM DEWATERING OPERATIONS MUST ALSO BE CONDUCTED IN A MANNER SUFFICIENT TO PREVENT EROSION FROM THE DISCHARGE RUNOFF.
4. IN SEDIMENT TRAP OR BASIN OR POND DEWATERING OPERATIONS, WATER MUST ONLY BE REMOVED FROM THE SURFACE OF THE CONTAINED WATER. A SKIMMER OR SIMILAR FLOATING DEVICE MUST BE USED, TO ONLY REMOVE THE WATER AT THE SURFACE.
5. DO NOT DISCHARGE ON A SLOPE GREATER THAN THREE PERCENT NOR WITHIN 20 FEET OF A SURFACE WATER BODY.
6. DEWATERING SHALL NOT OCCUR DURING OR IMMEDIATELY AFTER PRECIPITATION EVENTS, BUT EXCEPTIONS SHALL BE EVALUATED ON CASE BY CASE BASIS. CONTACT THE ENGINEER AND AUTHORITY HAVING JURISDICTION

DEWATERING

NOTES:

1. CONSIDERATION MUST BE GIVEN TO ANTICIPATED CLIMATE AND SEASONAL CONDITIONS WHEN PLANTING SEED.
2. SEED SHALL BE FREE OF WEEDY SPECIES AND APPROPRIATE FOR SITE SOILS AND REGIONAL CLIMATE. SEED AND MULCH PER THE CONSTRUCTION DRAWINGS AND THE 02900 PLANTING SPECIFICATION IMMEDIATELY AFTER TOPSOIL IS APPLIED AND FINAL GRADE IS REACHED.
3. THE SITE HAS ACHIEVED FINAL STABILIZATION ONCE ALL AREAS ARE COVERED WITH BUILDING FOUNDATION OR PAVEMENT, OTHER LANDSCAPING COVER (STONE, MULCH, ETC.), OR HAVE A STAND OF GRASS WITH A MINIMUM OF 70 PERCENT DENSITY OVER THE ENTIRE VEGETATED AREA, OR GREATER IN ACCORDANCE WITH THE GENERAL PERMIT REQUIREMENTS.
4. VEGETATED AREAS MUST BE WATERED, FERTILIZED, AND RESEEDED AS NEEDED TO ACHIEVE THIS REQUIREMENT.
5. THE VEGETATIVE DENSITY MUST BE MAINTAINED THROUGH PROJECT COMPLETION TO BE CONSIDERED STABILIZED. AREAS PROTECTED BY EROSION CONTROL BLANKETS ARE NOT PERMANENTLY STABILIZED UNTIL THE APPLICABLE GENERAL PERMIT REQUIREMENT FOR FINAL VEGETATIVE DENSITY IS ACHIEVED.
6. RIP-RAP, MULCH, GRAVEL, DECOMPOSED GRANITE OR OTHER EQUIVALENT PERMANENT STABILIZATION MEASURES MAY BE EMPLOYED IN LIEU OF VEGETATION BASED ON SITE-SPECIFIC CONDITIONS, DESIGN AND GOVERNING AUTHORITY APPROVAL.
7. ALL VEGETATED AREAS SHALL BE INSPECTED REGULARLY TO CONFIRM THAT A HEALTHY STAND OF GRASS IS MAINTAINED.

SEEDING/VEGETATION REQUIREMENTS

NOTES:

1. THE GC IS REQUIRED TO, AT A MINIMUM, INITIATE SOIL STABILIZATION MEASURES IMMEDIATELY WHENEVER ANY CLEARING, GRADING, EXCAVATING OR OTHER EARTH DISTURBING ACTIVITIES HAVE PERMANENTLY CEASED ON ANY PORTION OF THE SITE, OR TEMPORARILY CEASED ON ANY PORTION OF THE SITE .
2. **ALL PERIMETER DIKES, SWALES, DITCHES, PERIMETER SLOPES AND ALL SLOPES STEEPER THAN 3 HORIZONTAL TO 1 VERTICAL (3:1) SHALL BE PROVIDED TEMPORARY OR PERMANENT STABILIZATION WITH GROUND COVER (SUCH AS THE USE OF FAST-GERMINATING ANNUAL GRASS/GRAIN VARIETIES, STRAW/HAY MULCH, WOOD CELLULOSE FIBERS, TACKIFIERS, NETTING AND/OR BLANKETS) AS SOON AS PRACTICABLE BUT IN ANY EVENT WITHIN 7 CALENDAR DAYS FROM THE LAST LAND-DISTURBING ACTIVITY. (PER NC GENERAL PERMIT - NCG 010000)**
3. **ALL OTHER DISTURBED AREAS SHALL BE PROVIDED TEMPORARY OR PERMANENT STABILIZATION WITH GROUND COVER (SUCH AS THE USE OF FAST-GERMINATING ANNUAL GRASS/GRAIN VARIETIES, STRAW/HAY MULCH, WOOD CELLULOSE FIBERS, TACKIFIERS, NETTING AND/OR BLANKETS) AS SOON AS PRACTICABLE BUT IN ANY EVENT WITHIN 21 CALENDAR DAYS FROM THE LAST LAND-DISTURBING ACTIVITY.(PER NCDEQ SECTION 6.01 OF PRACTICE STANDARDS AND SPECIFIACTIONS)**
4. THE GC HAS 21 DAYS FROM INITIATION OF STABILIZATION TO COMPLETE SOIL PREPARATION, SEEDING, MULCHING, AND ANY OTHER REQUIRED ACTIVITIES RELATED TO THE PLANTING AND ESTABLISHMENT OF VEGETATION. THE GC ALSO HAS 7 DAYS FROM INITIATION OF STABILIZATION TO COMPLETELY INSTALL NON-VEGETATED MEASURES, IF UTILIZED.
5. ALL DISTURBED AREAS MUST BE STABILIZED TEMPORARILY WITH THE USE OF FAST-GERMINATING ANNUAL GRASS/GRAIN VARIETIES APPROPRIATE FOR SITE SOIL AND CLIMATE CONDITIONS. MULCH IS REQUIRED FOR ALL SEEDING APPLICATIONS, AND ALL MULCH APPLICATIONS MUST INCLUDE A SUITABLE FORM OF MULCH ANCHORING TO MINIMIZE MOVEMENT OF MULCH BY WIND OR WATER.
6. ALTERNATIVE STABILIZATION MEASURES TO SEEDING, SUCH AS ANCHORED MULCH APPLICATION (WITHOUT SEEDING), MAY BE UTILIZED DURING PERIODS WHEN VEGETATIVE GROWTH IS UNLIKELY (E.G. WINTER MONTHS).
7. IT IS NOT ACCEPTABLE TO ALLOW BARE SOIL TO REMAIN EXPOSED AT ANY TIME DURING THE YEAR, REGARDLESS OF WEATHER/TEMPERATURE/SITE CONDITIONS.
8. ALTERNATIVE STABILIZATION MEASURES INCLUDE, BUT ARE NOT LIMITED TO: ANCHORED STRAW/HAY MULCH, WOOD CELLULOSE FIBER MULCH, SPRAY-ON SOIL GLUES/BINDERS, AND ROLLED EROSION CONTROL PRODUCTS.
9. ALL ROLLED EROSION CONTROL PRODUCTS SHALL HAVE CURRENT QDOR(TM) STATUS ISSUED BY THE EROSION CONTROL TECHNOLOGY COUNCIL (ECTC) PLUS ANY STATE OR AGENCY-SPECIFIC REQUIREMENTS. EVIDENCE OF QDOR(TM) APPROVAL SHALL ACCOMPANY THE PRODUCT SHIPPED TO THE JOBSITE FOR READY IDENTIFICATION BY THE CONTRACTOR OR AGENCY INSPECTOR.
10. ROLLED EROSION CONTROL PRODUCTS (NETS, BLANKETS, TURF REINFORCED MATES) AND VEGETATED AREAS NOT MEETING REQUIRED VEGETATIVE DENSITIES FOR FINAL STABILIZATION MUST BE INSPECTED DAILY. RILING, RUTTING AND OTHER SIGNS OF EROSION INDICATE THE SPECIFIED EROSION CONTROL DEVICE IS NOT FUNCTIONING OR INSTALLED PROPERLY AND/OR ADDITIONAL EROSION CONTROL DEVICES ARE WARRANTED.

TEMPORARY SEEDING OR STABILIZATION

NOTES:

1. PERMANENT STABILIZATION SHALL BE ACCOMPLISHED IN ALL DISTURBED AREAS BY COVERING THE SOIL WITH PAVEMENT, BUILDING STRUCTURES, VEGETATION, OR OTHER FORMS OF SOIL STABILIZATION.
2. THE GC IS REQUIRED TO INITIATE PERMANENT SOIL STABILIZATION MEASURES IMMEDIATELY UPON REACHING FINAL GRADE.
3. **ALL PERIMETER DIKES, SWALES, DITCHES, PERIMETER SLOPES AND ALL SLOPES STEEPER THAN 3 HORIZONTAL TO 1 VERTICAL (3:1) SHALL BE PROVIDED TEMPORARY OR PERMANENT STABILIZATION WITH GROUND COVER (SUCH AS THE USE OF FAST-GERMINATING ANNUAL GRASS/GRAIN VARIETIES, STRAW/HAY MULCH, WOOD CELLULOSE FIBERS, TACKIFIERS, NETTING AND/OR BLANKETS) AS SOON AS PRACTICABLE BUT IN ANY EVENT WITHIN 7 CALENDAR DAYS FROM THE LAST LAND-DISTURBING ACTIVITY. (PER NC GENERAL PERMIT - NCG 010000)**
4. **ALL OTHER DISTURBED AREAS SHALL BE PROVIDED TEMPORARY OR PERMANENT STABILIZATION WITH GROUND COVER (SUCH AS THE USE OF FAST-GERMINATING ANNUAL GRASS/GRAIN VARIETIES, STRAW/HAY MULCH, WOOD CELLULOSE FIBERS, TACKIFIERS, NETTING AND/OR BLANKETS) AS SOON AS PRACTICABLE BUT IN ANY EVENT WITHIN 14 CALENDAR DAYS FROM THE LAST LAND-DISTURBING ACTIVITY.(PER NCDEQ SECTION 6.01 OF PROCTICE STANDARDS AND SPECIFICATIONS)**
5. THE GC HAS 21 DAYS FROM INITIATION OF STABILIZATION TO COMPLETE SOIL PREPARATION, SEEDING, MULCHING, AND ANY OTHER REQUIRED ACTIVITIES RELATED TO THE PLANTING AND ESTABLISHMENT OF VEGETATION. THE GC ALSO HAS 7 DAYS FROM INITIATION OF STABILIZATION TO COMPLETELY INSTALL NON-VEGETATED MEASURES, IF UTILIZED.

SOILS MUST BE PREPARED BEFORE INSTALLATION OF SOD OR SEED.

6. AT THE COMPLETION OF GROUND-DISTURBING ACTIVITIES, THE ENTIRE SITE MUST HAVE PERMANENT VEGETATIVE COVER MEETING VEGETATIVE DENSITY REQUIREMENTS IN THE GENERAL PERMIT, OR MULCH PER LANDSCAPE PLAN, IN ALL AREAS NOT COVERED BY HARDSCAPE (STONE, PAVEMENT, BUILDINGS, ETC.).
7. SEEDED AREAS SHALL BE PROTECTED WITH STRAW MULCH, HYDRAULIC MULCH OR A ROLLED EROSION CONTROL PRODUCT. STRAW MULCH MUST BE TACKIFIED OR CRIMPED BY DISC OR OTHER MACHINERY, AND ROLLED EROSION CONTROL PRODUCTS MUST BE INSTALLED PER MANUFACTURER RECOMMENDATIONS. ONLY ROLLED EROSION CONTROL PRODUCTS ARE PERMITTED TO BE USED IN FLOW CONVEYANCES.
8. ALL AREAS TO BE SEEDED MUST MEET TOPSOIL DEPTH, PH AND ORGANIC CONTENT REQUIREMENTS. SEE 02900 SPECIFICATION FOR INSTRUCTION ON PROPER SOIL PREPARATION.
9. FINAL SITE STABILIZATION IS ACHIEVED WHEN PERENNIAL VEGETATIVE COVER PROVIDES PERMANENT STABILIZATION WITH A UNIFORM DENSITY GREATER THAN 70 PERCENT OVER THE ENTIRE AREA TO BE STABILIZED BY VEGETATIVE COVER. THIS AREA IS EXCLUSIVE OF AREAS THAT ARE COVERED WITH ROCK (CRUSHED GRANITE, GRAVEL, ETC.) OR LANDSCAPE MULCH, PAVED OR HAVE A BUILDING OR OTHER PERMANENT STRUCTURE ON THEM.

PERMANENT SEEDING, SOD OR MULCHING

PRELIMINARY
NOT FOR CONSTRUCTION

Pennoni
Firm License F-1267
PENNONI ASSOCIATES INC.
401 Providence Road #200
Chapel Hill, NC 27514
T 919.929.1173 F 919.493.6548

ALL DIMENSIONS MUST BE VERIFIED BY CONTRACTOR AND OWNER MUST BE NOTIFIED OF ANY DISCREPANCIES BEFORE PROCEEDING WITH WORK

NORTH CAROLINA REGISTERED PROFESSIONAL ENGINEER SEAL 042486 JUSTIN J. BROWN

PROPOSED GROCERY STORE
1814 DURHAM-CHAPEL HILL BLVD
CHAPEL HILL, NC 27514

DETAILS

LEON CAPITAL GROUP
5970 FAIRVIEW ROAD, SUITE 450
CHARLOTTE, NC 28210

DATE	NO.	REVISIONS	BY
5/03/2018	3	PER TOWN COMMENTS	SAK
3/30/2018	2	PER TOWN COMMENTS	JJB
2/23/18	1	PER TOWN COMMENTS	RLM

ALL DOCUMENTS PREPARED BY PENNONI ASSOCIATES ARE INSTRUMENTS OF SERVICE IN RESPECT OF THE PROJECT. THEY ARE NOT INTENDED OR REPRESENTED TO BE SUITABLE FOR REUSE BY OWNER OR OTHERS ON THE EXTENSIONS OF THE PROJECT OR ON ANY OTHER PROJECT. ANY REUSE WITHOUT WRITTEN VERIFICATION OR ADAPTATION BY PENNONI ASSOCIATES FOR THE SPECIFIC PURPOSE INTENDED WILL BE AT OWNERS SOLE RISK AND WITHOUT LIABILITY OR LEGAL EXPOSURE TO PENNONI ASSOCIATES; AND OWNER SHALL INDEMNIFY AND HOLD HARMLESS PENNONI ASSOCIATES FROM ALL CLAIMS, DAMAGES, LOSSES AND EXPENSES ARISING OUT OF OR RESULTING THEREFROM.

PROJECT	LCGR1601
DATE	2018-01-26
DRAWING SCALE	NTS
DRAWN BY	SAK
APPROVED BY	JJB

CS6001

P:\Projects\LCGR\LCGR1601-Grocery Site\DESIGN_PUBLISH\Phase 1\CS6001.dwg PLOTTED: 5/3/2018 3:50 PM, BY: Scott Krusell PLOTSTYLE: Pennoni NCS.stb PROJECT STATUS: PHASE 1

GRAVEL CONSTRUCTION ENTRANCE NOTES:

1. ALL SITE ACCESS MUST BE CONFINED TO THE CONSTRUCTION EXIT(S). BARRICADE TO PREVENT USE OF ANY LOCATIONS OTHER THAN THE CONSTRUCTION EXIT(S) WHERE VEHICLES OR EQUIPMENT MAY ACCESS THE SITE.
2. CONTRACTOR TO LOCATE TEMPORARY CONSTRUCTION FENCING, JERSEY BARRIERS, OR BOTH ALONG THE SIDES OF THE CONSTRUCTION EXIT TO PREVENT CONSTRUCTION TRAFFIC FROM SHORT CIRCUITING/BYPASSING THE EXIT.
3. IF THE ACTION OF VEHICLES TRAVELING OVER THE GRAVEL CONSTRUCTION EXIT(S) IS NOT SUFFICIENT TO PREVENT TRACKING OF DIRT, DUST OR MUD, THEN TIRES MUST BE WASHED BEFORE THE VEHICLES ENTER A PUBLIC ROAD. ALL WASH WATER MUST BE ROUTED TO A SEDIMENT TRAP OR OTHER TREATMENT AREA AND SHALL NOT BE DIRECTLY DISCHARGED OFF-SITE.
4. LOCATIONS WHERE VEHICLES ENTER AND EXIT THE SITE MUST BE INSPECTED FOR EVIDENCE OF SEDIMENT TRACKING BEYOND THE PERMITTED PROJECT AREA. ALL MATERIALS SPILLED, DROPPED, WASHED OR TRACKED FROM VEHICLES ONTO ROADWAYS OR INTO STORM DRAINS MUST BE REMOVED IMMEDIATELY.
5. ANY SEDIMENT DEPOSITED ON THE ROADWAY SHALL BE SWEPT AS NECESSARY (AND WITHIN THE SAME DAY AS DISCOVERY) AND DISPOSED OF IN AN APPROPRIATE MANNER. SEDIMENT SHALL NOT BE WASHED INTO STORM SEWER SYSTEMS.
6. EXIT(S) SHALL BE MAINTAINED IN A CONDITION WHICH WILL PREVENT TRACKING OR FLOW OF MUD BEYOND THE EXIT(S). THIS MAY REQUIRE PERIODIC TOP DRESSING OF THE CONSTRUCTION EXIT(S) AS CONDITIONS DEMAND.
7. CONTRACTOR SHALL BE PERMITTED TO TURN THE STONE WHEN THE SURFACE BECOMES SMOOTH AND SURFACE VOIDS ARE FILLED TO MAINTAIN EFFECTIVENESS OF CONSTRUCTION EXIT UNTIL SUCH TIME THAT VOIDS BELOW THE SURFACE BECOME FILLED AND THE CONSTRUCTION EXIT IS NO LONGER EFFECTIVE. AT SUCH A TIME THE CONTRACTOR SHALL REMOVE THE INEFFECTIVE STONE AND REPLACE PER DETAIL.
8. IF EXIT BMP IS STILL INEFFECTIVE, GC MUST CONTACT THE ENGINEER AND SUBMIT AN RFI AS NECESSARY.

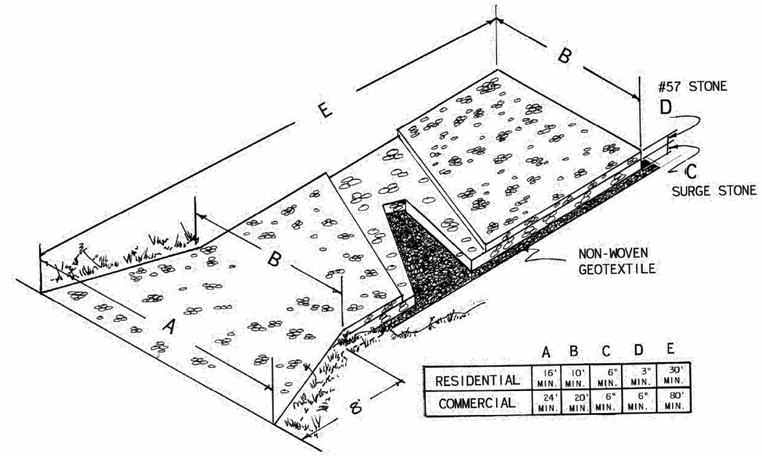

	A	B	C	D	E
RESIDENTIAL	16' MIN.	10' MIN.	6" MIN.	3" MIN.	30' MIN.
COMMERCIAL	24' MIN.	20' MIN.	6" MIN.	6" MIN.	80' MIN.

GRAVEL CONSTRUCTION ENTRANCE

NOT TO SCALE

ENGINEERING DEPARTMENT STANDARD DETAILS

TITLE	REVISIONS			DET.NO
GRAVEL CONSTRUCTION ENTRANCE	NO	DATE	BY	E-1

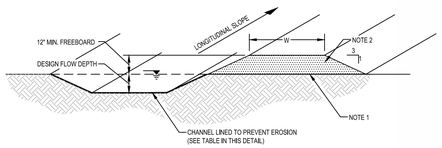

TYPICAL TRAPAZOIDAL-SHAPED DIVERSION

NOTES:

1. REMOVE ANY EXISTING VEGETATION AND SCARIFY OR BENCH ADJACENT SOILS PRIOR TO PLACING BERM.
2. BERM MATERIALS MUST BE ADEQUATELY COMPACTED AND IMMEDIATELY STABILIZED.
3. DIVERSION DITCHES/BERMS MUST BE IMMEDIATELY STABILIZED TO PREVENT EROSION AND TRANSPORT OF SEDIMENT.

DIVERSION DITCHES AND BERMS							
DIVERSION NAME AND SEGMENT	LENGTH (FT.)	LONGITUDINAL SLOPE	DESIGN FLOW DEPTH (FT)	EROSION PROTECTION TYPE (I.E., MATTING, BLANKET, ETC.)	CHANNEL BOTTOM WIDTH (IN.)	CHANNEL DEPTH (FT.)
NORTHERN CHANNEL	600	0.8%	0.90	NAG S75 (STAPLE PATTERN 'D')	36	1.90 (MIN)
SOUTHERN CHANEL	460	0.5%	1.41	NAG S75 (STAPLE PATTERN 'D')	36	2.41 (MIN)

DIVERSION CHANNEL

NOT TO SCALE

FIGURE 6.61d
Sediment Basin (with Riser Barrel Pipe)

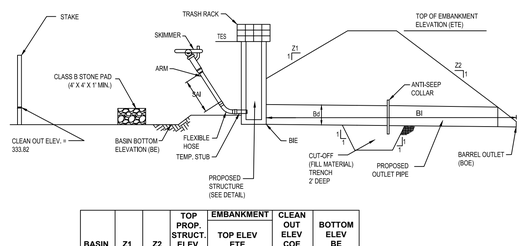

BASIN NO.	Z1 (FT)	Z2 (FT)	TOP PROP. STRUCT. ELEV. TES (FT)	EMBANKMENT TOP ELEV ETE (FT)	CLEAN OUT ELEV COE (FT)	BOTTOM ELEV BE (FT)
1	3	3	337.67	339.50	333.82	333.80

SKIMMER			OUTLET BARREL				
DIA Dr (IN)	LENGTH SAI (FT)	MAT'L	DIA Bd (IN)	INLET ELEV BIE (FT)	MAT'L	LENGTH BI (FT)	OUTLET ELEV BOE (FT)
3	6	PVC	24	333.00	HDPE	121	332.39

NOTES:
1. SEE AND PLACE MATTING FOR EROSION CONTROL ON INTERIOR AND EXTERIOR SIDESLOPES.
2. INSTALL A MINIMUM OF 3 COIR FIBER BAFFLES IN ACCORDANCE WITH PRACTICE STANDARD 6.65.
3. INSTALL SKIMMER AND COUPLING TO RISER STRUCTURE.
4. THE ARM PIPE SHALL HAVE A MINIMUM LENGTH OF 6 FT. BETWEEN THE SKIMMER AND COUPLING.

SEDIMENT BASIN

NOT TO SCALE

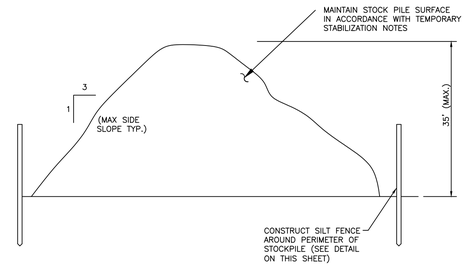

TEMPORARY STOCKPILE DETAIL

NOT TO SCALE

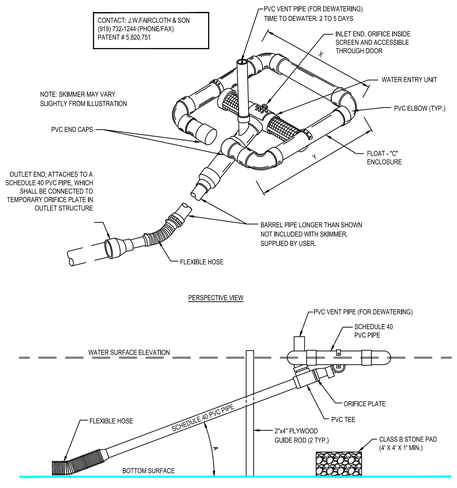

BASIN NO.	BASIN VOLUME (CF)	FLOAT SIZE (IN)	HEAD ON ORIFICE (IN)	ORIFICE RADIUS (IN)	SPILLWAY ELEVATION MINUS CO ELEV.	ARM LENGTH (FT)	ROCK BOTTOM ELEVATION
1	53,439	3	3	1.4	1.6	6.0'	333.00

NOTES:

1.) "A" SHOULD BE 45° OR LESS WHEN THE WATER SURFACE IS AT THE MAXIMUM POOL ELEVATION - THE ELEVATION OF THE 2 CFS/ACRE DISCHARGE.

2.) GUIDE ROPE AND STAKES SHALL BE INSTALLED FROM SKIMMER HEAD TO TOP OF BASIN BERM. GUIDE ROPE SHALL BE OF SUFFICIENT LENGTH TO ALLOW SKIMMER HEAD FREE MOVEMENT FROM CLEAN OUT ELEVATION, TO TOP OF THE 2 CFS/AC DISCHARGE ELEVATION.

FAIRCLOTH SKIMMER

NOT TO SCALE

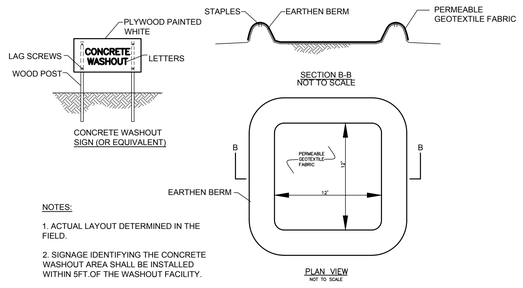

NOTES:

1. ACTUAL LAYOUT DETERMINED IN THE FIELD.

2. SIGNAGE IDENTIFYING THE CONCRETE WASHOUT AREA SHALL BE INSTALLED WITHIN 5FT.OF THE WASHOUT FACILITY.

CONCRETE WASHOUT

TYPE "ABOVE GRADE" WITH EARTHEN BERMS

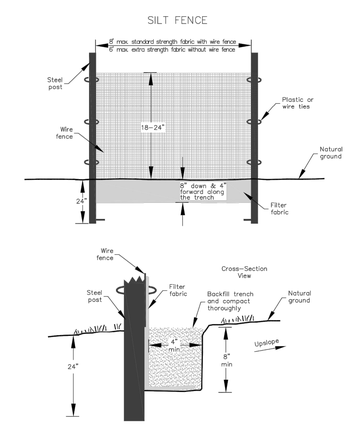

GENERAL NOTES:

1. Use silt fence only when drainage area does not exceed ¼ acre and never in areas of concentrated flow.
2. Silt fence shall not be removed unless site is stabilized and inspected by Town of Chapel Hill staff.

NOTE: DRAWING NOT TO SCALE

ENGINEERING DEPARTMENT STANDARD DETAILS

TITLE:	REVISIONS		DET. NO.
SILT FENCE	08/13	15	SD-18

SILT FENCE DETAIL

N.T.S.

INSTRUCTIONS FOR

SILT FENCE OUTLET

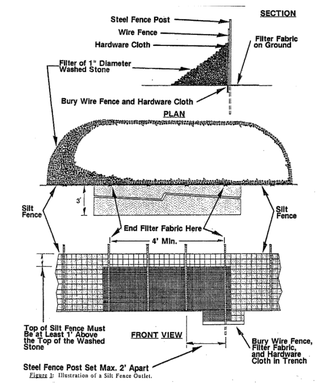

Figure 2: Illustration of a Silt Fence Outlet.

INSTALLATION

1. REFER TO THE PLANS FOR LOCATIONS AND SPECIFICATIONS. DURING INSTALLATION OF THE SILT BARRIER OR SILT FENCE, INSPECT THE INSTALLATION TO DETERMINE IF OUTLETS ARE NEEDED ACCORDING TO THE CRITERIA SET FORTH IN THE SPECIFICATIONS FOR THE BARRIER AND FENCE. IF THERE ARE QUESTIONS OR PROBLEMS WITH THE LOCATION, EXTENT, OR METHOD OF INSTALLATION, CONTACT THE ENGINEER, ARCHITECT, OR RESPONSIBLE PERSONNEL ON THE SITE FOR ASSISTANCE. EROSION CONTROL PERSONNEL HAVE COPIES OF INSTRUCTIONS AND MAY HAVE PHOTOGRAPHS OF PROPERLY INSTALLED OUTLETS AS AN AID TO INSTALLATION.

   IF THE SILT FENCE OUTLET IS NOT INSTALLED CORRECTLY THE FIRST TIME, IT WILL HAVE TO BE REBUILT.

2. DETERMINE THE EXACT LOCATION OF THE OUTLET BEFORE COMPLETING INSTALLATION OF THE SILT BARRIER OR SILT FENCE, TAKING INTO CONSIDERATION:

   * INSTALL THE OUTLET AT THE LOWEST POINT(S) IN THE BARRIER OR FENCE WHERE WATER WILL POND.
   * INSTALL THE OUTLET WHERE IT IS ACCESSIBLE FOR INSTALLATION, MAINTENANCE, AND REMOVAL.
   * ALLOW AT LEAST:

     15 FEET BETWEEN THE BARRIER OR FENCE AND SINGLE-STORY BUILDINGS.

     25 FEET FOR FORK LIFTS BETWEEN THE BARRIER OR FENCE AND MULTIPLE-STORY BUILDINGS.

     10 FEET BETWEEN THE BARRIER OR FENCE AND THE TOE OF FILL SLOPES.
   * PLACE THE OUTLET SO THAT WATER FLOWING THROUGH IT WILL NOT CREATE AN EROSION HAZARD BELOW; AVOID STEEP SLOPES BELOW THE OUTLET AND AREAS WITHOUT PROTECTIVE VEGETATION. USE SLOPE DRAINS IF NECESSARY.
   * DETERMINE THE LOCATION OF THE OUTLET: FOR A SILT BARRIER, WHEN THE TRENCH IS DUG TO BURY THE BOTTOM OF THE FABRIC BECAUSE THE BARRIER WILL BE OMITTED AT THE OUTLET; FOR A SILT FENCE, WHEN THE WIRE FENCE IS IN PLACE BECAUSE THE FILTER FABRIC WILL BE OMITTED AT THE OUTLET.

3. REFER TO THE ILLUSTRATIONS OF THE OUTLET IN THE PLAN.

4. CLEAR STUMPS AND ROOTS FROM THE LOCATION OF THE OUTLET. CLEAR ADEQUATE ACCESS FOR THE EQUIPMENT NEEDED FOR INSTALLATION, MAINTENANCE, AND REMOVAL.

5. FOR A SILT BARRIER:

   * JUST BELOW THE GAP IN THE BARRIER, PLACE A LAYER OF FILTER FABRIC ON THE GROUND TO PROTECT THE SOIL FROM EROSION BY OUTFLOW FROM THE OUTLET; PLACE 6 INCHES OF THE UPPER EDGE IN THE TRENCH. STAKE THE REMAINING EDGES OF THE FABRIC TO HOLD IT IN PLACE.
   * ALONG THE GAP WHERE THE OUTLET WILL GO, PLACE STEEL FENCE POSTS FOR STRENGTH. THE POSTS MUST BE A MAXIMUM OF 2 FEET APART AND DRIVEN INTO SOLID GROUND AT LEAST 18 INCHES.
   * PLACE HARDWARE CLOTH (WELDED GALVANIZED SCREEN WITH SQUARE 1/4 - 1/2-INCH HOLES) ON THE UPHILL SIDE OF THE POSTS TO HOLD THE WASHED STONE IN PLACE. PUT 6 INCHES OF THE BOTTOM OF THE CLOTH IN THE TRENCH AND FASTEN IT TO THE POSTS WITH LENGTHS OF WIRE.
   * BURY THE BOTTOM OF THE HARDWARE CLOTH AND THE UPPER EDGE OF THE FILTER FABRIC BELOW THE OUTLET IN THE TRENCH AND COMPACT THE FILL.
   * PLACE A FILTER OF 1-INCH DIAMETER WASHED STONE ON THE UPHILL SIDE OF THE OUTLET. PILE THE STONE UP TO THE TOP OF THE HARDWARE CLOTH AND OVER THE JOINT BETWEEN THE OUTLET AND THE BARRIER.

6. FOR A SILT FENCE:

   * JUST BELOW THE GAP IN THE FENCE, PLACE A LAYER OF FILTER FABRIC ON THE GROUND TO PROTECT THE SOIL FROM EROSION BY OUTFLOW FROM THE OUTLET; PLACE 6 INCHES OF THE UPPER EDGE IN THE TRENCH. STAKE THE OTHER EDGES OF THE FABRIC TO HOLD IT IN PLACE.
   * ALONG THE GAP WHERE THE OUTLET WILL GO, PLACE ADDITIONAL STEEL FENCE POSTS FOR STRENGTH. THE POSTS MUST BE A MAXIMUM OF 2 FEET APART AND DRIVEN INTO SOLID GROUND AT LEAST 18 INCHES.
   * PLACE HARDWARE CLOTH (WELDED GALVANIZED SCREEN WITH SQUARE 1/4 - 1/2-INCH HOLES) ON THE UPHILL SIDE OF THE POSTS TO HOLD THE WASHED STONE IN PLACE. PUT 6 INCHES OF THE BOTTOM OF THE CLOTH IN THE TRENCH AND FASTEN IT TO THE POSTS WITH LENGTHS OF WIRE.
   * BURY THE BOTTOM OF THE HARDWARE CLOTH, THE UPPER EDGE OF THE FILTER FABRIC BELOW THE OUTLET, AND THE WIRE FENCE IN THE TRENCH AND COMPACT THE FILL.
   * PLACE A FILTER OF 1-INCH DIAMETER WASHED STONE ON THE UPHILL SIDE OF THE OUTLET. PILE THE STONE UP TO THE TOP OF THE HARDWARE CLOTH AND OVER THE JOINT BETWEEN THE OUTLET AND THE SILT FENCE.

MAINTENANCE

MATERIALS, EQUIPMENT, AND PERSONNEL MUST BE AVAILABLE FOR MAINTENANCE AT ALL TIME.

1. INSPECT THE SILT FENCE OUTLET:

   * DURING CONSTRUCTION: TO DETERMINE IF MACHINERY, FALLING TREES, ETC. HAVE DAMAGED THE BARRIER, FENCE, OR OUTLET; IF DAMAGED, MAKE REPAIRS. TO SEE THAT FILL MATERIAL HAS NOT ACCUMULATED AGAINST THE OUTLET, BLOCKING OUTFLOW; IF IT HAS, REMOVE THE MATERIAL, REPAIR THE DAMAGE, AND MOVE THE FENCE OR FILL SO THAT IT DOES NOT HAPPEN AGAIN.
   * AFTER EACH RAINFALL: TO DETERMINE IF RUNOFF FLOWING THROUGH THE OUTLET HAS CAUSED DAMAGE BY UNDERMINING THE FENCE OR OUTLET, OR IF ACCUMULATED WATER HAS COLLAPSED THE OUTLET; IF IT HAS, MAKE REPAIRS OR INSTALL A SEDIMENT TRAP IF NECESSARY TO PREVENT FUTURE FAILURES.

2. CLEAN OUT ACCUMULATED SEDIMENT WHEN IT REACHES A DEPTH OF ONE-HALF THE HEIGHT OF THE OUTLET. PLACE THE SEDIMENT IN A DISPOSAL AREA, OR MIX IT WITH DRY SOIL ON THE SITE IF APPROPRIATE.

   DO NOT DISPOSE OF SEDIMENT IN A MANNER THAT WILL CREATE AN EROSION HAZARD.

3. WHEN THE STONE FILTER BECOMES CLOGGED, PREVENTING FLOW THROUGH THE FILTER, REMOVE THE CONTAMINATED STONE, DISPOSE OF IT PROPERLY, AND REPLACE IT WITH CLEAN WASHED STONE.

4. REPAIR THE OUTLET IF DAMAGED BY USE OR DURING MAINTENANCE. REBUILD IT TO THE ORIGINAL CONFIGURATION.

REMOVAL

1. WHEN GRADING IN THE DRAINAGE AREA ABOVE THE OUTLET HAS BEEN COMPLETED AND THE DISTURBED AREA SUFFICIENTLY STABILIZED TO RESTRAIN EROSION, THE OUTLET MUST BE REMOVED.

2. CLEAN OUT ACCUMULATED SEDIMENT AND DISPOSE OF IT PROPERLY.

3. REMOVE POSTS, FENCE, FABRIC, WIRE, AND WASHED STONE; DISPOSE OF THEM PROPERLY.

4. GRADE THE LOCATION AS NECESSARY.

5. STABILIZE THE DISTURBED AREA WHERE THE OUTLET WAS LOCATED.

SILT FENCE OUTLET

N.T.S.

PRELIMINARY
NOT FOR CONSTRUCTION

Pennoni
Firm License F-1267
PENNONI ASSOCIATES INC.
401 Providence Road #200
Chapel Hill, NC 27514
T 919.929.1173 F 919.493.6548

ALL DIMENSIONS MUST BE VERIFIED BY CONTRACTOR AND OWNER MUST BE NOTIFIED OF ANY DISCREPANCIES BEFORE PROCEEDING WITH WORK

NORTH CAROLINA PROFESSIONAL ENGINEER SEAL 042486 JUSTIN J. BROWN

PROPOSED GROCERY STORE
1814 DURHAM-CHAPEL HILL BLVD
CHAPEL HILL, NC 27514

DETAILS

LEON CAPITAL GROUP
5970 FAIRVIEW ROAD, SUITE 450
CHARLOTTE, NC 28210

NO.	DATE	REVISIONS	BY
3	5/03/2018	PER TOWN COMMENTS	SAK
2	3/30/2018	PER TOWN COMMENTS	JJB
1	2/23/18	PER TOWN COMMENTS	RLM

ALL DOCUMENTS PREPARED BY PENNONI ASSOCIATES ARE INSTRUMENTS OF SERVICE IN RESPECT OF THE PROJECT. THEY ARE NOT INTENDED OR REPRESENTED TO BE SUITABLE FOR REUSE BY OWNER OR OTHERS ON THE EXTENSIONS OF THE PROJECT OR ON ANY OTHER PROJECT. ANY REUSE WITHOUT WRITTEN VERIFICATION OR ADAPTATION BY PENNONI ASSOCIATES FOR THE SPECIFIC PURPOSE INTENDED WILL BE AT OWNERS SOLE RISK AND WITHOUT LIABILITY OR LEGAL EXPOSURE TO PENNONI ASSOCIATES; AND OWNER SHALL INDEMNIFY AND HOLD HARMLESS PENNONI ASSOCIATES FROM ALL CLAIMS, DAMAGES, LOSSES AND EXPENSES ARISING OUT OF OR RESULTING THEREFROM.

PROJECT	LCGR1601
DATE	2018-01-26
DRAWING SCALE	AS SHOWN
DRAWN BY	SAK
APPROVED BY	JJB

CS6002

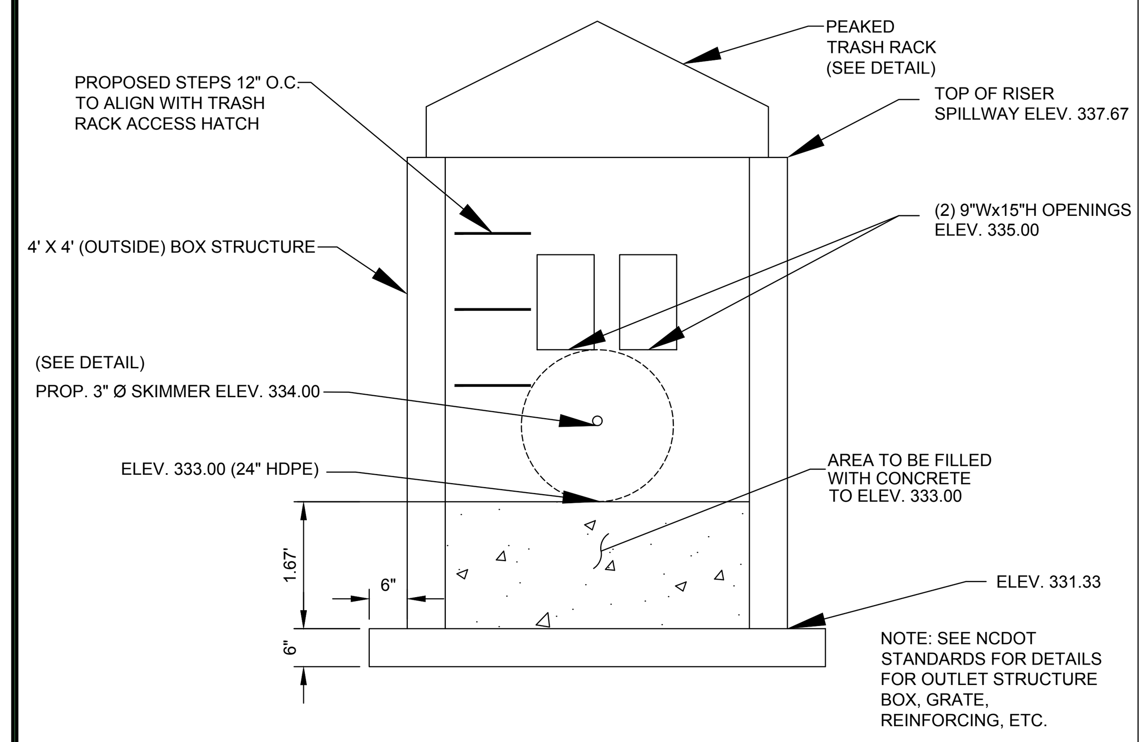

NOTE: SEE NCDOT STANDARDS FOR DETAILS FOR OUTLET STRUCTURE BOX, GRATE, REINFORCING, ETC.

NOTE: ALL CONCRETE TO BE 4,000 P.S.I. COMPRESSIVE STRENGTH.

RISER STRUCTURE DETAIL

SCALE: 1"=2'

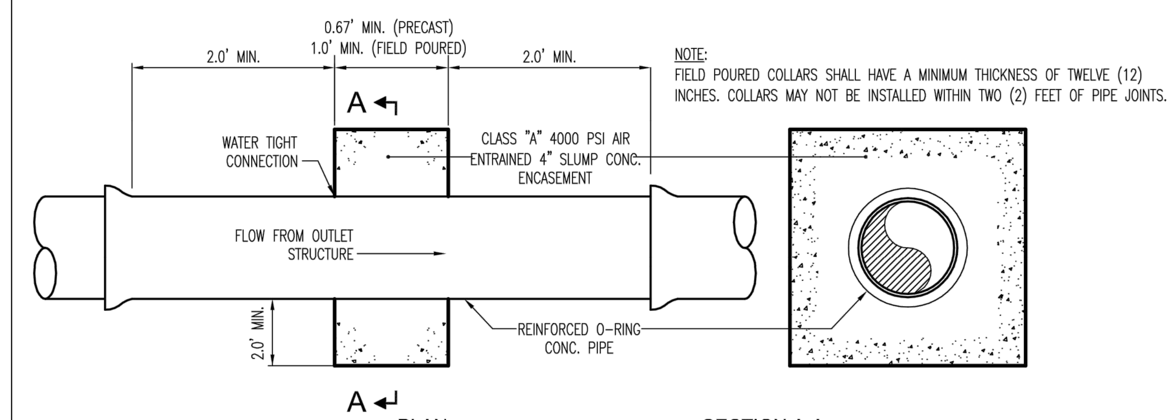

NOTE:
FIELD POURED COLLARS SHALL HAVE A MINIMUM THICKNESS OF TWELVE (12) INCHES. COLLARS MAY NOT BE INSTALLED WITHIN TWO (2) FEET OF PIPE JOINTS.

ANTI-SEEP COLLAR DETAIL

NOT TO SCALE

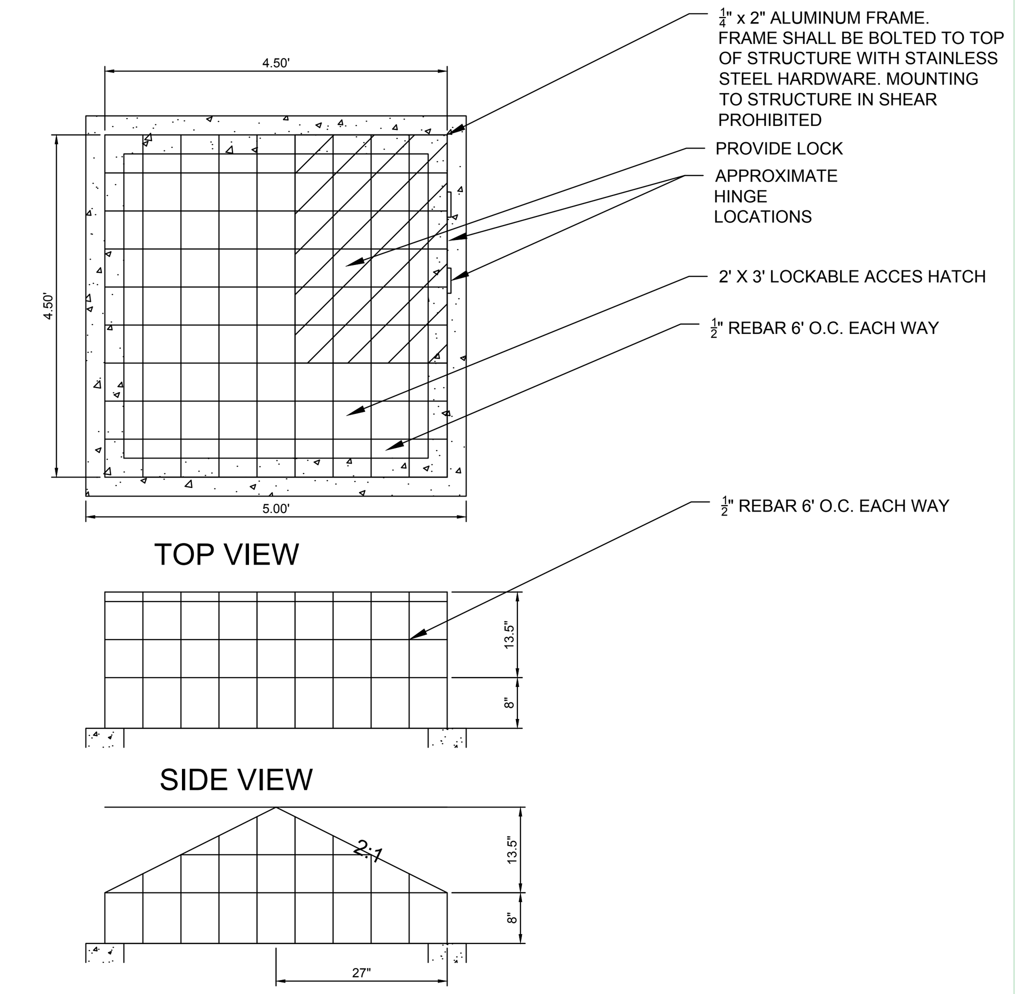

½" x 2" ALUMINUM FRAME. FRAME SHALL BE BOLTED TO TOP OF STRUCTURE WITH STAINLESS STEEL HARDWARE. MOUNTING TO STRUCTURE IN SHEAR PROHIBITED

PROVIDE LOCK

APPROXIMATE HINGE LOCATIONS

2' X 3' LOCKABLE ACCES HATCH

½" REBAR 6' O.C. EACH WAY

½" REBAR 6' O.C. EACH WAY

TRASH RACK

SCALE: 1"=2'

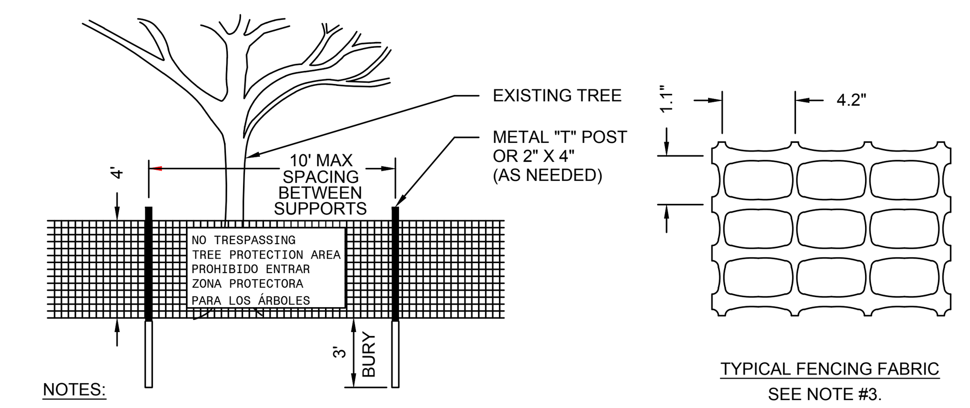

NOTES:

1. PLACE CONTINUOUS RUN OF FENCE MATERIAL AS SHOWN ON PLANS.
2. ATTACH AT 10' MAXIMUM INTERVALS TO 2x4 POSTS. DO NOT STAPLE TO TREES.
3. FENCE MATERIAL SHALL BE 'TENSAR' HIGH STRENGTH POLYMER GEOGRID FABRIC BY TENSAR CORPORATION, MORROW, GEORGIA, OR EQUAL, BRIGHT ORANGE COLOR.
4. AT 100' O.C., PLACE SIGNS IN ENGLISH AND SPANISH: "NO TRESPASSING - TREE PROTECTION AREA" and "PROHIBIDO ENTRAR - ZONA PROTECTORA PARA LOS ARBOLES"
5. A PRE-CONSTRUCTION CONFERENCE SHALL BE HELD WITH THE PROJECT MANAGER AND THE TOWN'S LANDSCAPE ARCHITECT BEFORE ANY SITE WORK BEGINS.
6. ANY TREE ROOTS EXPOSED BY CONSTRUCTION SHALL BE SEVERED CLEANLY WITH A PRUNING TOOL.
7. THE SOIL WITHIN THE PROTECTED AREA AROUND EXISTING TREES SHALL NOT BE DRIVEN UPON AFTER FENCE REMOVAL FOR THE PURPOSE OF INSTALLING LANDSCAPING.

TREE PROTECTION FENCE

N.T.S.

BLOCK AND GRAVEL FILTER

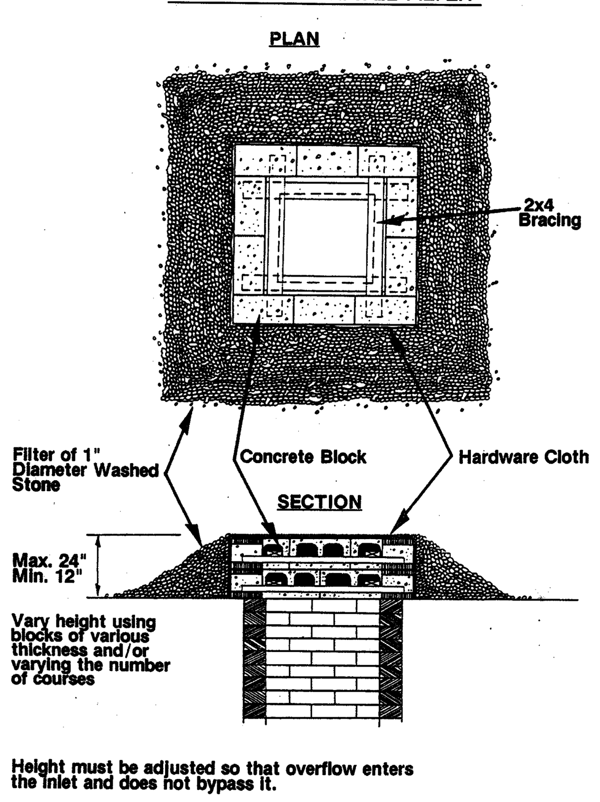

Height must be adjusted so that overflow enters the inlet and does not bypass it.

Figure 1: Illustration of a Block and Gravel Filter.

INSTRUCTIONS FOR STORM DRAIN INLET PROTECTION USING A

BLOCK AND GRAVEL FILTER

INSTALLATION

1. REFER TO THE PLANS FOR LOCATIONS AND SPECIFICATIONS. IF THERE ARE QUESTIONS OR PROBLEMS WITH THE LOCATION OR METHODS OF INSTALLATION, CONTACT THE ENGINEER, ARCHITECT, OR RESPONSIBLE PERSONNEL ON THE SITE FOR ASSISTANCE. EROSION CONTROL PERSONNEL HAVE COPIES OF INSTRUCTIONS AND MAY HAVE PHOTOGRAPHS OF PROPERLY INSTALLED BLOCK AND GRAVEL FILTERS AS AN AID TO INSTALLATION.

   IF THE INLET PROTECTION IS NOT INSTALLED CORRECTLY THE FIRST TIME, IT WILL HAVE TO BE REBUILT.

2. DETERMINE THE LOCATION ON THE GROUND, TAKING INTO CONSIDERATION:
   * DIVERSIONS AND/OR BERMS MUST BE USED TO FORCE RUNOFF THROUGH THE FILTER INTO THE INLET SO THAT IT DOES NOT BY-PASS THE INLET AND CAUSE PROBLEMS ELSEWHERE.
   * IF THE INLET IS TO BE RAISED IN STAGES AS THE FILL IS BROUGHT UP AROUND IT, THE FILTER MUST BE REMOVED FOR GRADING AND REPLACED IMMEDIATELY SO THAT THE INLET IS ALWAYS PROTECTED FROM THE ENTRY OF UNFILTERED RUNOFF.
3. REFER TO ILLUSTRATIONS IN THE PLAN TO ASSIST INSTALLATION.
4. PLACE CONCRETE BLOCKS AROUND THE OPENING OF THE INLET WITH THE HOLES IN THE BLOCK PARALLEL TO THE GROUND SO THAT WATER CAN FLOW THROUGH THE HOLES. VARY THE NUMBER OF COURSES TO BUILD THE FILTER TO THE REQUIRED HEIGHT. IT MUST BE AT LEAST 12 INCHES HIGH.
5. INSTALL 2 X 4'S AS SHOWN IN THE ILLUSTRATION FOR REINFORCEMENT.
6. WRAP HARDWARE CLOTH AROUND THE OUTSIDE OF THE BLOCKS AND ON THE GROUND. HARDWARE CLOTH IS WELDED, GALVANIZED WIRE FABRIC WITH 1/4 - 1/2-INCH SQUARE HOLES.
7. PILE CLEAN WASHED STONE (1-INCH DIAMETER) AROUND THE OUTSIDE OF THE BLOCKS AND ON TOP OF THE HARDWARE CLOTH.
8. WHERE POSSIBLE, DIG A SMALL PIT AROUND THE FILTER TO STORE SEDIMENT.
9. IT IS ADVISABLE TO PLACE GUARD STAKES AROUND THE FILTER TO ALERT MACHINERY OPERATORS OF ITS LOCATION AND PREVENT DAMAGE TO IT.
10. DIVERSIONS AND/OR BERMS MUST BE USED TO DIRECT RUNOFF TO THE FILTER AND INTO THE INLET. RUNOFF MUST NOT BE ALLOWED TO BY-PASS THE INLET AS IT WILL CREATE PROBLEMS DOWNHILL. REFER TO SPECIFIC DETAILS IN THE PLAN.

MAINTENANCE

MATERIALS, EQUIPMENT, AND PERSONNEL MUST BE AVAILABLE FOR MAINTENANCE AT ALL TIMES.

1. INSPECT THE BLOCK AND GRAVEL FILTER:
   * DURING CONSTRUCTION: TO SEE IF MACHINERY OR CONSTRUCTION ACTIVITY HAVE DAMAGED THE FILTER; IF DAMAGED, REPAIR IT. TO SEE IF CONSTRUCTION TRAFFIC HAS DAMAGED OR REDUCED THE CAPACITY OF THE BERMS AND DIVERSIONS DIRECTING RUNOFF TO THE FILTER; IF SO, MAKE REPAIRS.
   * AFTER EACH RAINFALL: TO SEE IF RUNOFF IS BY-PASSING THE INLET OR TOPPING THE BERMS OR DIVERSIONS BELOW THE FILTER; IF SO, INCREASE THEIR CAPACITY TO PREVENT IT.
2. WHEN THE STONE FILTER BECOMES COVERED WITH SEDIMENT AND CLOGGED SO THAT RUNOFF CANNOT FLOW THROUGH IT, THE CONTAMINATED STONE MUST BE REMOVED, DISPOSED OF PROPERLY, AND REPLACED WITH CLEAN WASHED STONE.

   DO NOT DISPOSE OF SEDIMENT IN A MANNER THAT WILL CREATE AN EROSION HAZARD.

3. IF THE FILTER IS DAMAGED, IF THE BLOCKS ARE DISLOCATED OR BROKEN, OR IF THE REINFORCEMENT IS DAMAGED, REBUILD THE FILTER TO ITS ORIGINAL DESIGN CONFIGURATION.

REMOVAL

1. WHEN GRADING IN THE DRAINAGE AREA ABOVE THE INLET HAS BEEN FINISHED AND THE DISTURBED AREAS STABILIZED, THE BLOCK AND GRAVEL FILTER MUST BE REMOVED.
2. REMOVE ANY ACCUMULATED SEDIMENT AND DISPOSE OF IT PROPERLY.
3. REMOVE THE STONE, HARDWARE CLOTH, BLOCK, AND 2 X 4'S, AND DISPOSE OF THEM PROPERLY.
4. STABILIZE THE DISTURBED AREA AS REQUIRED.

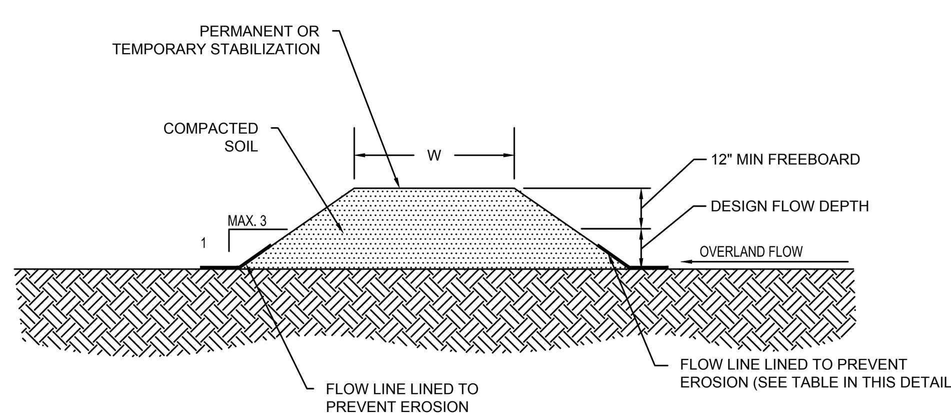

NOTES:

1. REMOVE ANY EXISTING VEGETATION AND SCARIFY OR BENCH ADJACENT SOILS PRIOR TO PLACING BERM..
2. BERM MATERIALS MUST BE ADEQUATELY COMPACTED AND IMMEDIATELY STABILIZED.
3. DIVERSION DITCH/BERMS MUSH BE IMMEDIATELY STABILIZED TO PREVENT EROSION AND TRANSPORT OF SEDIMENT.

DIVERSION DITCHES AND BERMS

DIVERSION NAME AND SEGMENT	LENGTH (FT.)	LONGITUDINAL SLOPE	DESIGN FLOW DEPTH (FT.)	EROSION PROTECTION TYPE (I.E., MATTING, BLANKET, ETC.)
EAST DIKE	113	0.012	0.60	NAG S75 (STAPLE PATTERN 'D')
WEST DIKE	166	0.028	0.51	NAG S75 (STAPLE PATTERN 'D')

DIVERSION DIKE

NOT TO SCALE

Typical Building Pad & Cap Detail

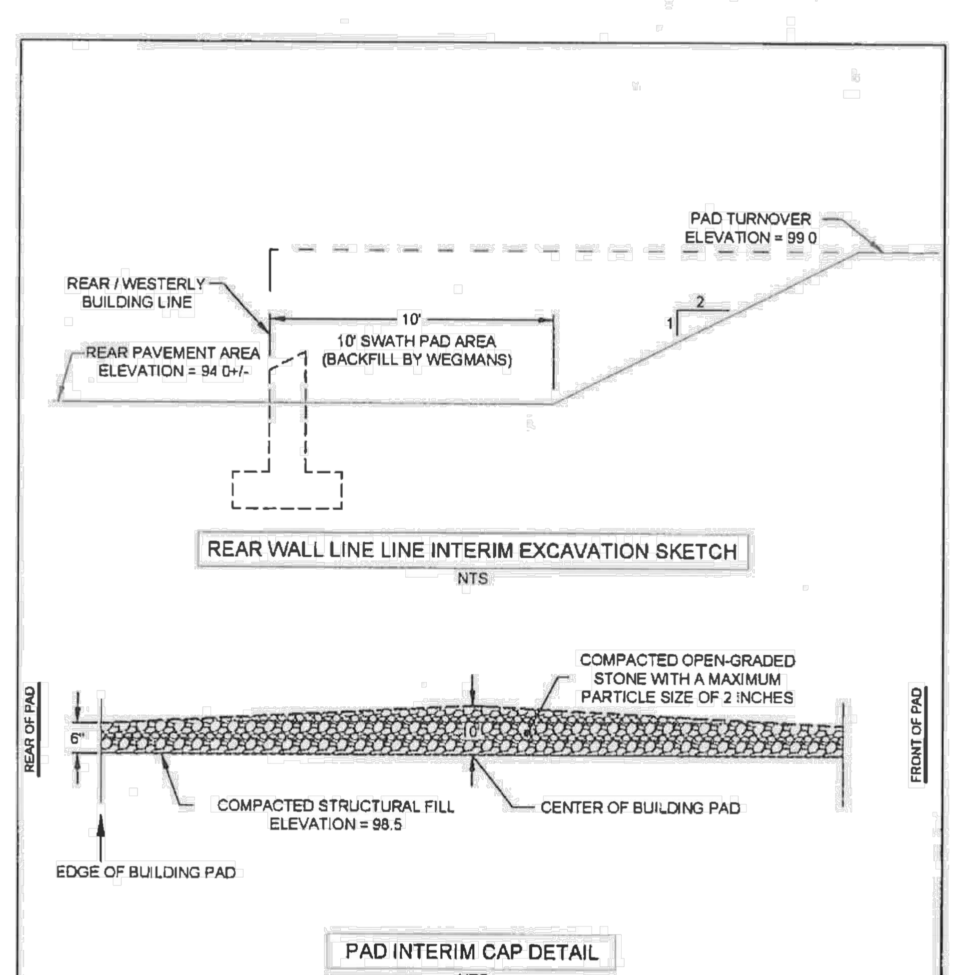

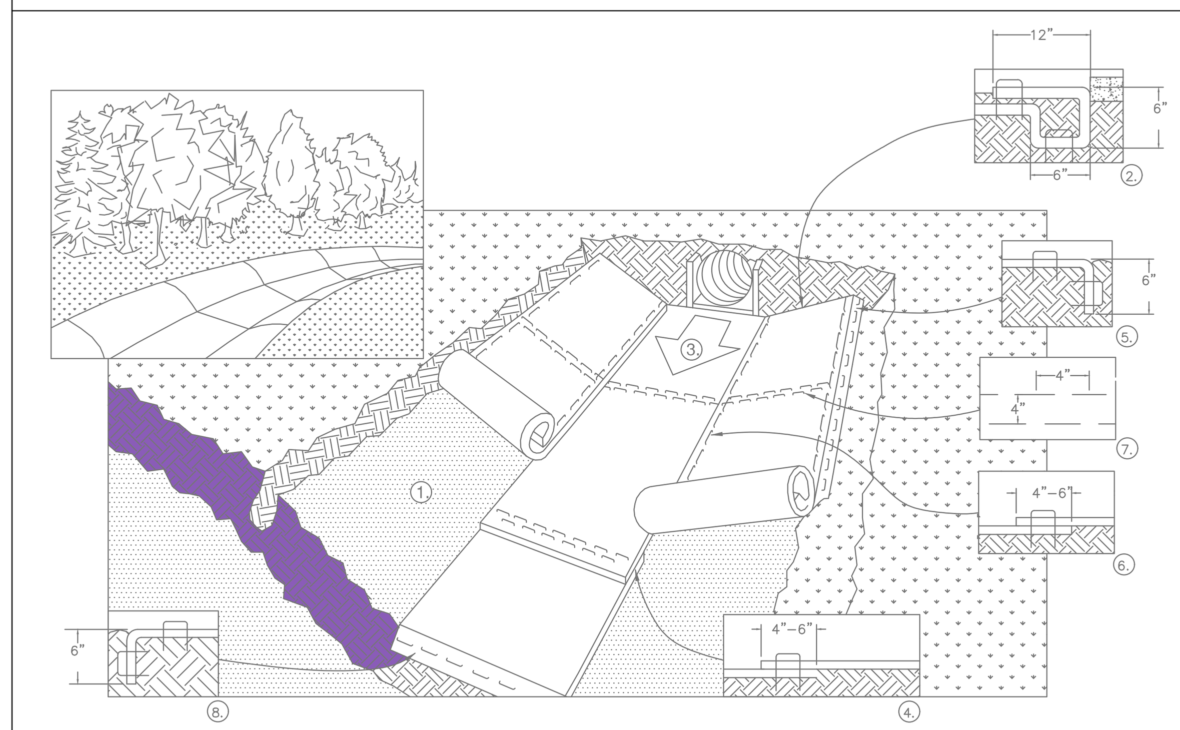

1. PREPARE SOIL BEFORE INSTALLING BLANKETS, INCLUDING ANY NECESSARY APPLICATION OF LIME, FERTILIZER, AND SEED.
2. BEGIN AT THE TOP OF THE CHANNEL BY ANCHORING THE BLANKET IN A 6" DEEP X 6" WIDE TRENCH WITH APPROXIMATELY 12" OF BLANKET EXTENDED BEYOND THE UP-SLOPE PORTION OF THE TRENCH. ANCHOR THE BLANKET WITH A ROW OF STAPLES/STAKES APPROXIMATELY 12"APART IN THE BOTTOM OF THE TRENCH. BACKFILL AND COMPACT THE TRENCH AFTER STAPLING. APPLY SEED TO COMPACTED SOIL AND FOLD REMAINING 12"PORTION OF BLANKET BACK OVER SEED AND COMPACTED SOIL. SECURE BLANKET OVER COMPACTED SOIL WITH A ROW OF STAPLES/STAKES SPACED APPROXIMATELY 12" APART ACROSS THE WIDTH OF THE BLANKET.
3. ROLL CENTER BLANKET IN DIRECTION OF WATER FLOW IN BOTTOM OF CHANNEL. BLANKETS WILL UNROLL WITH APPROPRIATE SIDE AGAINST THE SOIL SURFACE. ALL BLANKETS MUST BE SECURELY FASTENED TO SOIL SURFACE BY PLACING STAPLES/STAKES IN APPROPRIATE LOCATIONS AS PER MANUFACTURER'S RECOMMENDATIONS.
4. PLACE CONSECUTIVE BLANKETS END OVER END (SHINGLE STYLE) WITH A 4"-6" OVERLAP. USE A DOUBLE ROW OF STAPLES STAGGERED 4" APART AND 4" ON CENTER TO SECURE BLANKETS.
5. FULL LENGTH EDGE OF BLANKETS AT TOP OF SIDE SLOPES MUST BE ANCHORED WITH A ROW OF STAPLES/STAKES APPROXIMATELY 12" APART IN A 6" DEEP X 6" WIDE TRENCH. BACKFILL AND COMPACT THE TRENCH AFTER STAPLING.
6. ADJACENT BLANKETS MUST BE OVERLAPPED APPROXIMATELY 4"-6" (DEPENDING ON BLANKET TYPE) AND STAPLED. TO ENSURE PROPER SEAM ALIGNMENT, PLACE THE EDGE OF THE OVERLAPPING BLANKET (BLANKET BEING INSTALLED ON TOP) EVEN WITH THE SEAM STITCH ON THE BLANKET BEING OVERLAPPED.
7. IN HIGH FLOW CHANNEL APPLICATIONS, A STAPLE CHECK SLOT IS RECOMMENDED AT 30 TO 40 FOOT (9m-12m) INTERVALS. USE A DOUBLE ROW OF STAPLES STAGGERED 4" APART AND 4" ON CENTER OVER ENTIRE WIDTH OF THE CHANNEL.
8. THE TERMINAL END OF THE BLANKETS MUST BE ANCHORED WITH A ROW OF STAPLES/STAKES APPROXIMATELY 12" (30cm) APART IN A 6" DEEP X 6" WIDE TRENCH. BACKFILL AND COMPACT THE TRENCH AFTER STAPLING.
9. PLACE STAPLE/STAKES PER MANUFACTURER'S RECOMMENDATION FOR THE APPROPRIATE CHANNEL FLOW OR SHORELINE APPLICATION

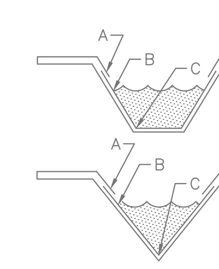

CRITICAL POINTS

A. OVERLAPS AND SEAMS
B. PROJECTED WATER LINE
C. CHANNEL BOTTOM/SIDE SLOPE VERTICES

NOTE:

1. HORIZONTAL STAPLE SPACING SHOULD BE ALTERED IF NECESSARY TO ALLOW STAPLES TO SECURE THE CRITICAL POINTS ALONG THE CHANNEL SURFACE.
2. IN LOOSE SOIL CONDITIONS, THE USE OF STAPLE OR STAKE LENGTHS GREATER THAN 6" MAY BE NECESSARY TO PROPERLY ANCHOR THE BLANKETS.
3. FOLLOW EROSION CONTROL TECHNOLOGY COUNCIL SPECIFICATION FOR PRODUCT SELECTION.

EROSION CONTROL LINING (CHANNEL INSTALLATION)

PRELIMINARY
NOT FOR CONSTRUCTION

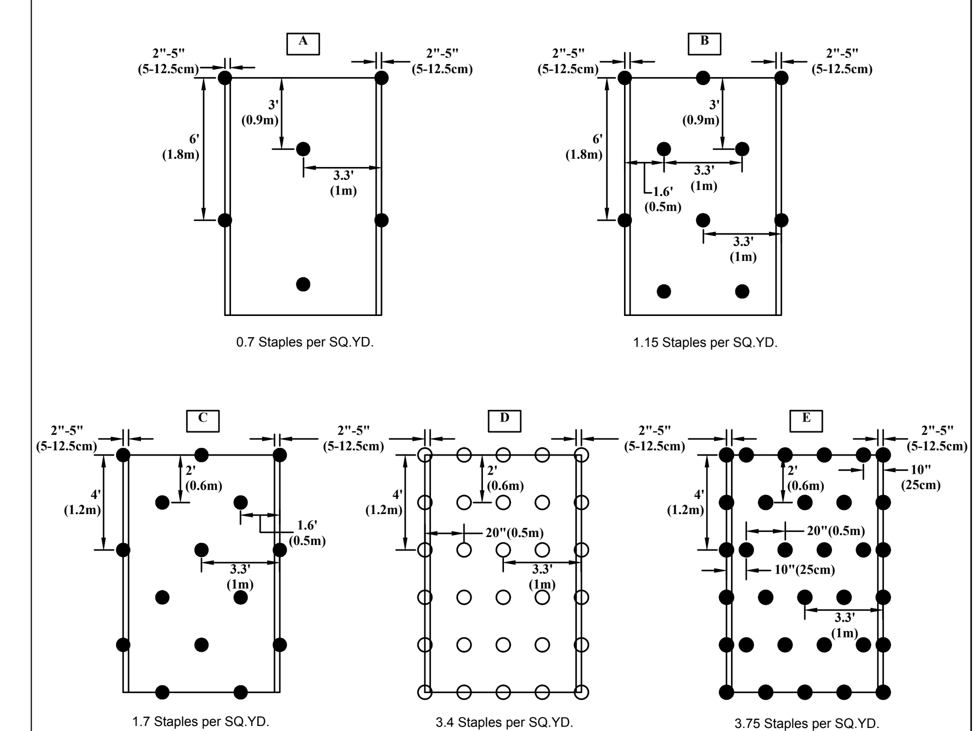

STAPLE PATTERN GUIDE

- 4:1 Slopes (A)
- 3:1 Slopes (B)
- 2:1 Slopes (C)
- 1:1 & Steeper Slopes (D)
- Medium/High Flow Channel (D)
- High Flow Channel And Shoreline (E)

NOTES:
* Use ECMDS® for more accurate staple pattern selection.

NORTH AMERICAN GREEN
5401 St. Wendel - Cynthiana Rd.
Poseyville, IN 47633
PH: 800-722-2040
www.nagreen.com

Disclaimer:
The information presented herein is general design information only. For specific applications, consult an independent professional for further design guidance.

Drawn on: 5-4-17

STAPLE PATTERN

N.T.S.

1. PREPARE SOIL BEFORE INSTALLING BLANKETS, INCLUDING ANY NECESSARY APPLICATION OF LIME, FERTILIZER, AND SEED.
2. BEGIN AT THE TOP OF THE SLOPE BY ANCHORING THE BLANKET IN A 6" DEEP X 6" WIDE TRENCH WITH APPROXIMATELY 12" OF BLANKET EXTENDED BEYOND THE UP-SLOPE PORTION OF THE TRENCH AS SHOWN IN DETAIL 2. ANCHOR THE BLANKET WITH A ROW OF STAPLES/STAKES APPROXIMATELY 12" APART IN THE BOTTOM OF THE TRENCH. BACKFILL AND COMPACT THE TRENCH AFTER STAPLING. APPLY SEED TO COMPACTED SOIL AND FOLD REMAINING 12" PORTION OF BLANKET BACK OVER SEED AND COMPACTED SOIL. SECURE BLANKET OVER COMPACTED SOIL WITH A ROW OF STAPLES/STAKES SPACED APPROXIMATELY 12" APART ACROSS THE WIDTH OF THE BLANKET.
3. ROLL THE BLANKETS (A.) DOWN OR (B.) HORIZONTALLY ACROSS THE SLOPE. BLANKETS WILL UNROLL WITH APPROPRIATE SIDE AGAINST THE SOIL SURFACE. ALL BLANKETS MUST BE SECURELY FASTENED TO SOIL SURFACE BY PLACING STAPLES/STAKES IN APPROPRIATE LOCATIONS AS PER MANUFACTURES RECOMMENDATION.
4. THE EDGES OF PARALLEL BLANKETS MUST BE STAPLED WITH MINIMUM 6" OVERLAP. TO ENSURE PROPER SEAM ALIGNMENT, PLACE THE EDGE OF THE OVERLAPPING BLANKET (BLANKET BEING INSTALLED ON TOP) EVEN WITH THE SEAM STITCH ON THE PREVIOUSLY INSTALLED BLANKET.
5. CONSECUTIVE BLANKETS SPLICED DOWN THE SLOPE MUST BE PLACED END OVER END (SHINGLE STYLE) WITH AN APPROXIMATE 3" OVERLAP. STAPLE THROUGH OVERLAPPED AREA, APPROXIMATELY 12" APART ACROSS ENTIRE BLANKET WIDTH.
6. PLACE STAPLES/STAKES PER MANUFACTURER'S RECOMMENDATION FOR THE APPROPRIATE SLOPE BEING APPLIED.

NOTES:
1. IN LOOSE SOIL CONDITIONS, THE USE OF STAPLE OR STAKE LENGTHS GREATER THAN 6" MAY BE NECESSARY TO PROPERLY SECURE THE BLANKETS.
2. FOLLOW EROSION CONTROL TECHNOLOGY COUNCIL SPECIFICATION FOR PRODUCT SELECTION.

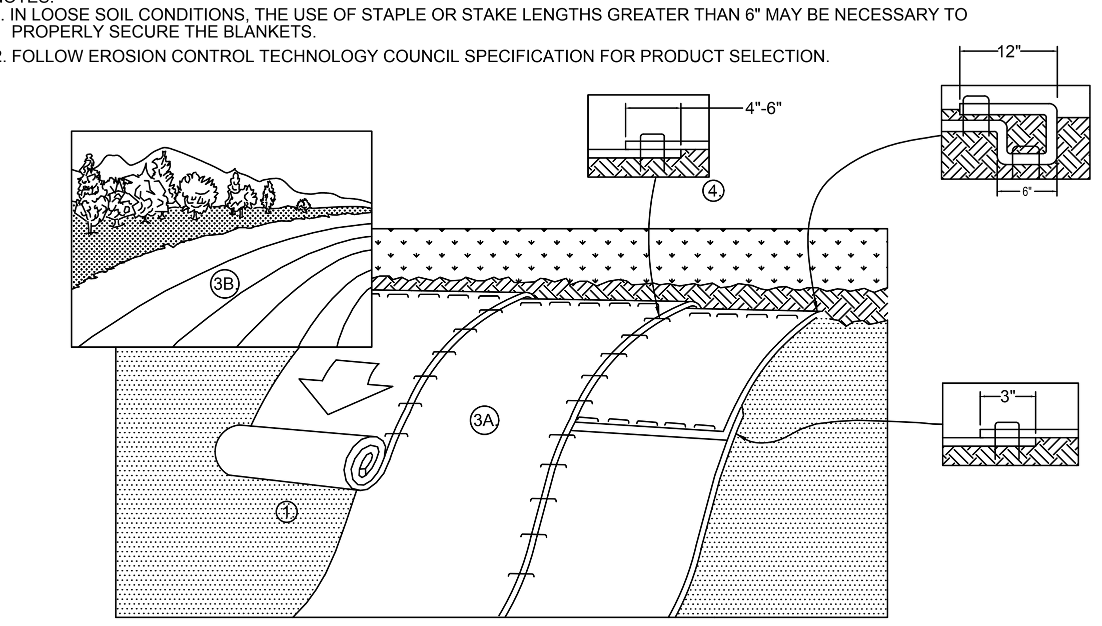

EROSION CONTROL BLANKET (SLOPE INSTALLATION)

NOT TO SCALE

Pennoni
Firm License F-1267
PENNONI ASSOCIATES INC.
401 Providence Road #200
Chapel Hill, NC 27514
T 919.929.1173 F 919.493.6548

ALL DIMENSIONS MUST BE VERIFIED BY CONTRACTOR AND OWNER MUST BE NOTIFIED OF ANY DISCREPANCIES BEFORE PROCEEDING WITH WORK

NORTH CAROLINA REGISTERED PROFESSIONAL ENGINEER SEAL 042486 JUSTIN J. BROWN

PROPOSED GROCERY STORE

1814 DURHAM-CHAPEL HILL BLVD
CHAPEL HILL, NC 27514

DETAILS

LEON CAPITAL GROUP
5970 FAIRVIEW ROAD, SUITE 450
CHARLOTTE, NC 28210

DATE	NO.	REVISIONS	BY
5/03/2018	3	PER TOWN COMMENTS	SAK
3/30/2018	2	PER TOWN COMMENTS	JJB
2/23/18	1	PER TOWN COMMENTS	RLM

ALL DOCUMENTS PREPARED BY PENNONI ASSOCIATES ARE INSTRUMENTS OF SERVICE IN RESPECT OF THE PROJECT. THEY ARE NOT INTENDED OR REPRESENTED TO BE SUITABLE FOR REUSE BY OWNER OR OTHERS ON THE EXTENSIONS OF THE PROJECT OR ON ANY OTHER PROJECT. ANY REUSE WITHOUT WRITTEN VERIFICATION OR ADAPTATION BY PENNONI ASSOCIATES FOR THE SPECIFIC PURPOSE INTENDED WILL BE AT OWNERS SOLE RISK AND WITHOUT LIABILITY OR LEGAL EXPOSURE TO PENNONI ASSOCIATES; AND OWNER SHALL INDEMNIFY AND HOLD HARMLESS PENNONI ASSOCIATES FROM ALL CLAIMS, DAMAGES, LOSSES AND EXPENSES ARISING OUT OF OR RESULTING THEREFROM.

PROJECT	LCGR1601
DATE	2018-01-26
DRAWING SCALE	AS SHOWN
DRAWN BY	SAK
APPROVED BY	JJB

CS6003