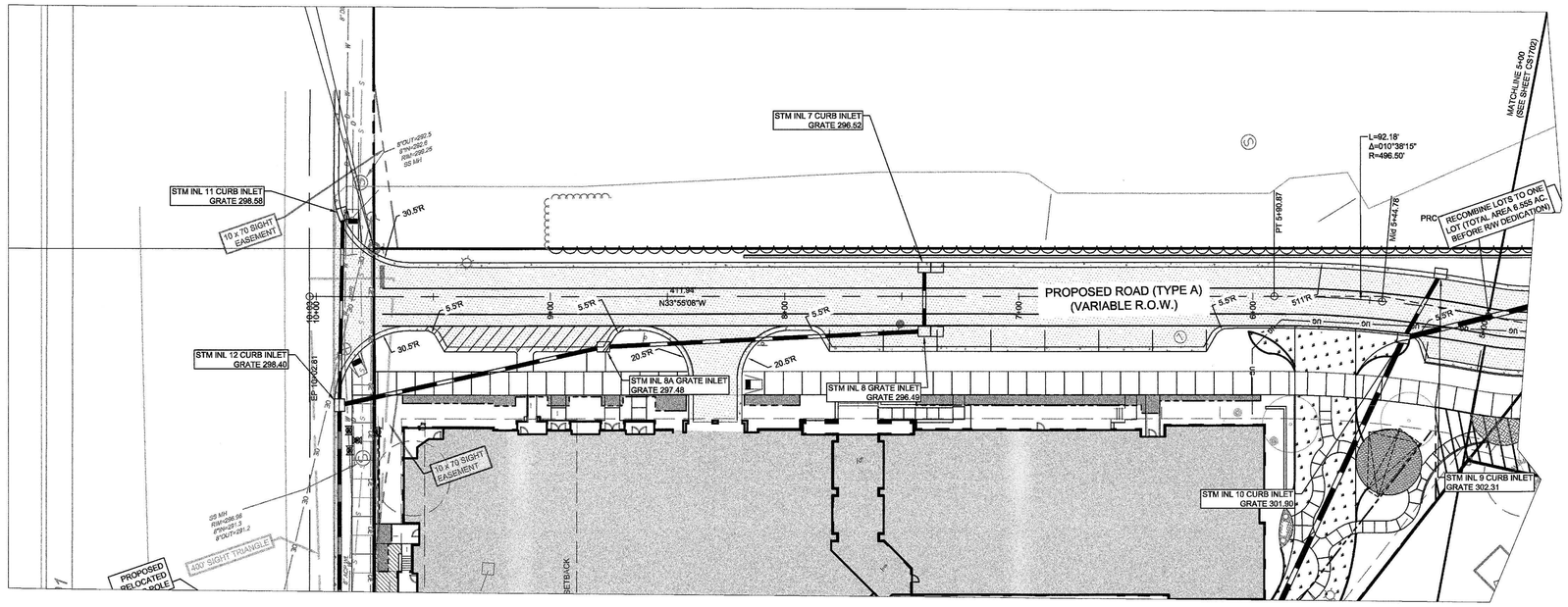

SCALE: 1" = 30'

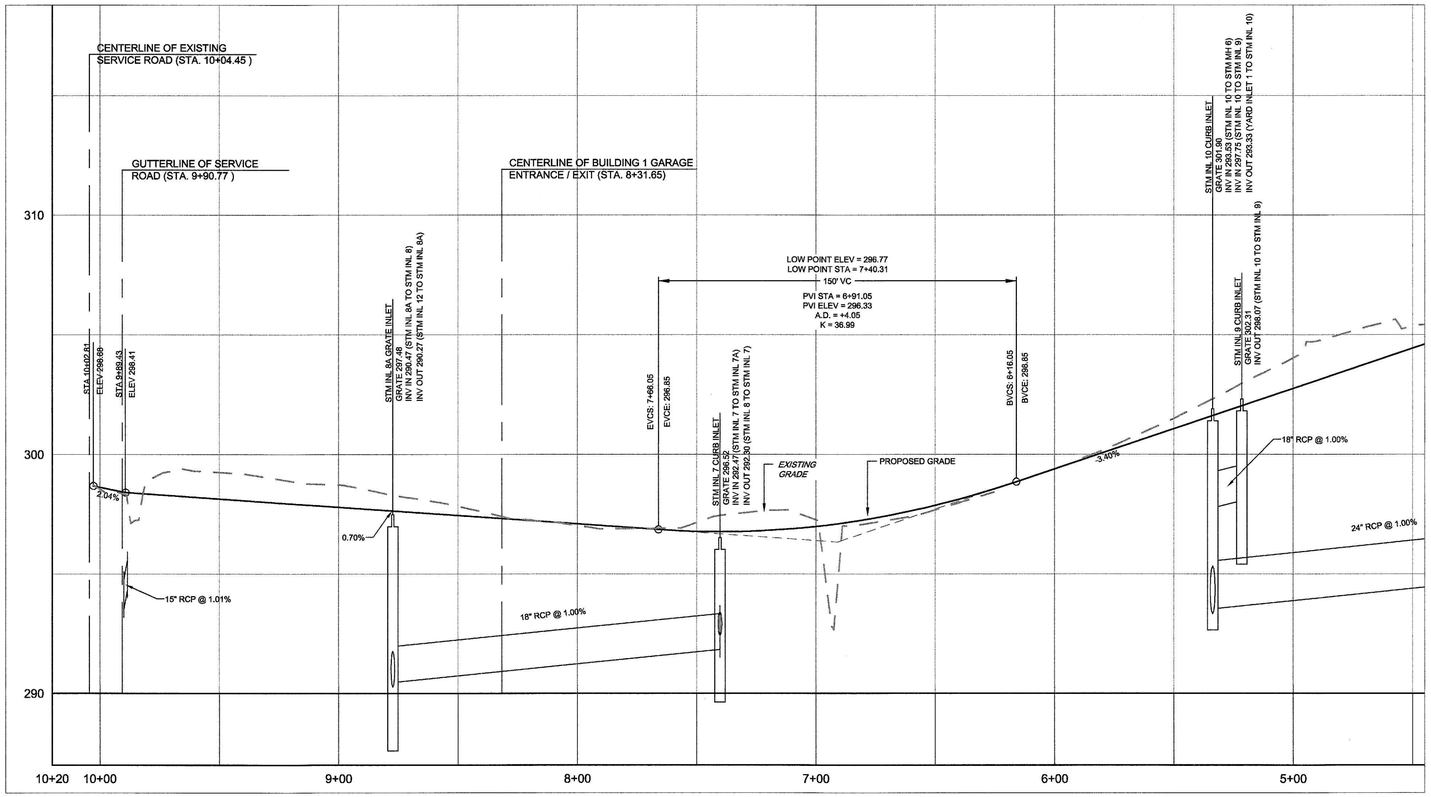

SCALE: HORIZONTAL 1" = 30'
VERTICAL 1" = 3'

0 30' 60'

PHILIP POST & ASSOCIATES
A Division of Pennoni Firm License F-1267
PENNONI ASSOCIATES INC.
401 Providence Road #200
Chapel Hill, NC 27514
T 919.929.1173 F 919.493.6548

ALL DIMENSIONS MUST BE VERIFIED BY CONTRACTOR AND OWNER MUST BE NOTIFIED OF ANY DISCREPANCIES BEFORE PROCEEDING WITH WORK

NOT FOR CONSTRUCTION

NORTH CAROLINA PROFESSIONAL ENGINEER 030617 TIMOTHY A. SEALS 4-10-17

HILLSTONE CHAPEL HILL
1730 FORDHAM BLVD.
CHAPEL HILL, NORTH CAROLINA 27514

PROPOSED ROAD PLAN AND PROFILE

LEON CAPITAL GROUP
5970 FAIRVIEW ROAD, SUITE 450
CHARLOTTE, NORTH CAROLINA 28210

NO.	DATE	REVISIONS
2	4/7/2017	TOWN COMMENT REVISIONS REVIEW #2
1	2/8/2017	REVISIONS PER TOWN'S REVIEW COMMENTS

ALL DOCUMENTS PREPARED BY PENNONI ASSOCIATES ARE INSTRUMENTS OF SERVICE IN RESPECT OF THE PROJECT. THEY ARE NOT INTENDED OR REPRESENTED TO BE SUITABLE FOR REUSE BY OWNER OR OTHERS ON THE EXTENSIONS OF THE PROJECT OR ON ANY OTHER PROJECT. ANY REUSE WITHOUT WRITTEN VERIFICATION OR ADAPTATION BY PENNONI ASSOCIATES FOR THE SPECIFIC PURPOSE INTENDED WILL BE AT OWNERS SOLE RISK AND WITHOUT LIABILITY OR LEGAL EXPOSURE TO PENNONI ASSOCIATE; AND OWNER SHALL INDEMNIFY AND HOLD HARMLESS PENNONI ASSOCIATES FROM ALL CLAIMS, DAMAGES, LOSSES AND EXPENSES ARISING OUT OF OR RESULTING THEREFROM.

PROJECT	LCGR1602
DATE	DECEMBER 7, 2016
DRAWING SCALE	1" = 30'
DRAWN BY	WRA
APPROVED BY	TAS

CS3501

SHEET 15 OF 26

P:\Projects\LCGR\CIVIL\CGR1602-Apartment Site\DESIGN_PUBLISH\CS3501.dwg PLOTTED: 4/10/2017 12:48 PM, BY: Donald Chilly PLOTSTYLE: Pennoni NCS.stb PROJECT STATUS: DESIGN DEVELOPMENT

0 30' 60'

PHILIP POST & ASSOCIATES
A Division of Pennoni Firm License F-1267
PENNONI ASSOCIATES INC.
401 Providence Road #200
Chapel Hill, NC 27514
T 919.929.1173 F 919.493.6548

ALL DIMENSIONS MUST BE VERIFIED BY CONTRACTOR AND OWNER MUST BE NOTIFIED OF ANY DISCREPANCIES BEFORE PROCEEDING WITH WORK

NOT FOR CONSTRUCTION

NORTH CAROLINA PROFESSIONAL ENGINEER SEAL 030517 TIMOTHY A. SMITH

4-10-17

HILLSTONE CHAPEL HILL

1730 FORDHAM BLVD.
CHAPEL HILL, NORTH CAROLINA 27514

LEON CAPITAL GROUP
5970 FAIRVIEW ROAD, SUITE 450
CHARLOTTE, NORTH CAROLINA 28210

PROPOSED ROAD PLAN AND PROFILE

#	DATE	NO.	REVISIONS	BY
#	4/7/2017	2	TOWN COMMENT REVISIONS REVIEW #2	WRA
#	2/8/2017	1	REVISIONS PER TOWNS REVIEW COMMENTS	WRA

ALL DOCUMENTS PREPARED BY PENNONI ASSOCIATES ARE INSTRUMENTS OF SERVICE IN RESPECT OF THE PROJECT. THEY ARE NOT INTENDED OR REPRESENTED TO BE SUITABLE FOR REUSE BY OWNER OR OTHERS ON THE EXTENSIONS OF THE PROJECT OR ON ANY OTHER PROJECT. ANY REUSE WITHOUT WRITTEN VERIFICATION OR ADAPTATION BY PENNONI ASSOCIATES FOR THE SPECIFIC PURPOSE INTENDED WILL BE AT OWNERS SOLE RISK AND WITHOUT LIABILITY OR LEGAL EXPOSURE TO PENNONI ASSOCIATE; AND OWNER SHALL INDEMNIFY AND HOLD HARMLESS PENNONI ASSOCIATES FROM ALL CLAIMS, DAMAGES, LOSSES AND EXPENSES ARISING OUT OF OR RESULTING THEREFROM.

PROJECT	LCGR1602
DATE	DECEMBER 7, 2016
DRAWING SCALE	1" = 30'
DRAWN BY	WRA
APPROVED BY	TAS

CS3502

SHEET 16 OF 26

P:\Projects\LCGR\COM\LCGR1602-Apartment Site\DESIGN_PUBLISH\CS3502.dwg PLOTTED: 4/10/2017 12:48 PM, BY: Donald Chilly P:\CTSY\LE Pennoni NCS.stb PROJECT STATUS: DESIGN DEVELOPMENT

10+00.00

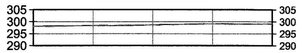

7+50.00

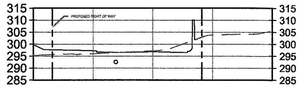

8+00.00

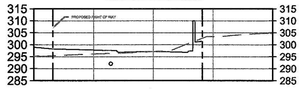

8+50.00

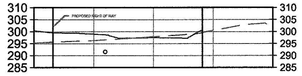

9+00.00

9+50.00

5+00.00

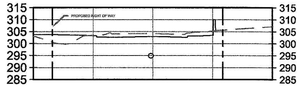

5+50.00

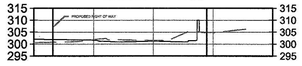

6+00.00

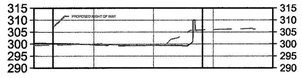

6+50.00

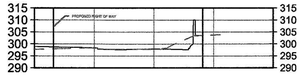

7+00.00

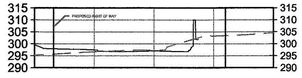

2+50.00

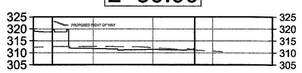

3+00.00

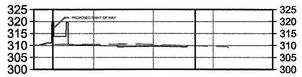

3+50.00

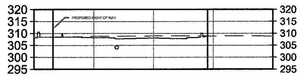

4+00.00

4+50.00

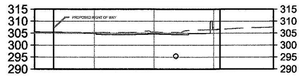

0+00.00

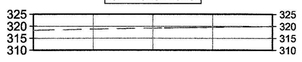

0+50.00

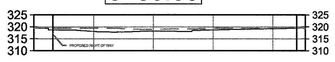

1+00.00

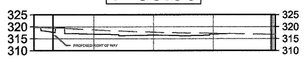

1+50.00

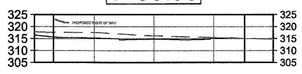

2+00.00

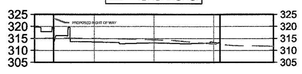

0 30' 60'

PHILIP POST & ASSOCIATES
A Division of Pennoni Firm License F-1267
PENNONI ASSOCIATES INC.
401 Providence Road #200
Chapel Hill, NC 27514
T 919.929.1173 F 919.493.6548

ALL DIMENSIONS MUST BE VERIFIED BY CONTRACTOR AND OWNER MUST BE NOTIFIED OF ANY DISCREPANCIES BEFORE PROCEEDING WITH WORK

NOT FOR CONSTRUCTION

NORTH CAROLINA PROFESSIONAL ENGINEER SEAL 030617 TIMOTHY A. STEVENS 4-10-2017

HILLSTONE CHAPEL HILL
1730 FORDHAM BLVD.
CHAPEL HILL, NORTH CAROLINA 27514

NEW STREET CROSS SECTIONS

LEON CAPITAL GROUP
5970 FAIRVIEW ROAD, SUITE 450
CHARLOTTE, NORTH CAROLINA 28210

#	#	#	#	#	WRA	WRA	BY
#	#	#	#	#	2	TOWN COMMENT REVISION REVIEW #2	
#	#	#	#	#	1	REVISIONS PER TOWN'S REVIEW COMMENTS	
#	#	#	#	#	4/7/2017	2/20/2017	DATE
						REVISIONS	NO.

ALL DOCUMENTS PREPARED BY PENNONI ASSOCIATES ARE INSTRUMENTS OF SERVICE IN RESPECT OF THE PROJECT. THEY ARE NOT INTENDED OR REPRESENTED TO BE SUITABLE FOR REUSE BY OWNER OR OTHERS ON THE EXTENSIONS OF THE PROJECT OR ON ANY OTHER PROJECT. ANY REUSE WITHOUT WRITTEN VERIFICATION OR ADAPTATION BY PENNONI ASSOCIATES FOR THE SPECIFIC PURPOSE INTENDED WILL BE AT OWNERS SOLE RISK AND WITHOUT LIABILITY OR LEGAL EXPOSURE TO PENNONI ASSOCIATE; AND OWNER SHALL INDEMNIFY AND HOLD HARMLESS PENNONI ASSOCIATES FROM ALL CLAIMS, DAMAGES, LOSSES AND EXPENSES ARISING OUT OF OR RESULTING THEREFROM.

PROJECT	LCGR1602
DATE	APRIL 10, 2017
DRAWING SCALE	1" = 30'
DRAWN BY	WRA
APPROVED BY	TAS

CS3503

SHEET 17 OF 26

P:\Projects\LCGR\CAM\LCGR1602-Apartment Site\DESIGN_PUBLISH\CS3503.dwg PLOTTED: 4/10/2017 2:33 PM, BY: Donald Chilly PLOTSTYLE: Pennoni WCS.ctb PROJECT STYTUS: DESIGN DEVELOPMENT

P:\Projects\LCGRCOM\LCGR1602-Apartment Site\DESIGN_PUBLISH\CS3601.dwg PLOTTED: 4/10/2017 12:49 PM, BY: Donald Chitty PLOTSTYLE: Pennoni NCS.stb PROJECT STATUS: DESIGN DEVELOPMENT

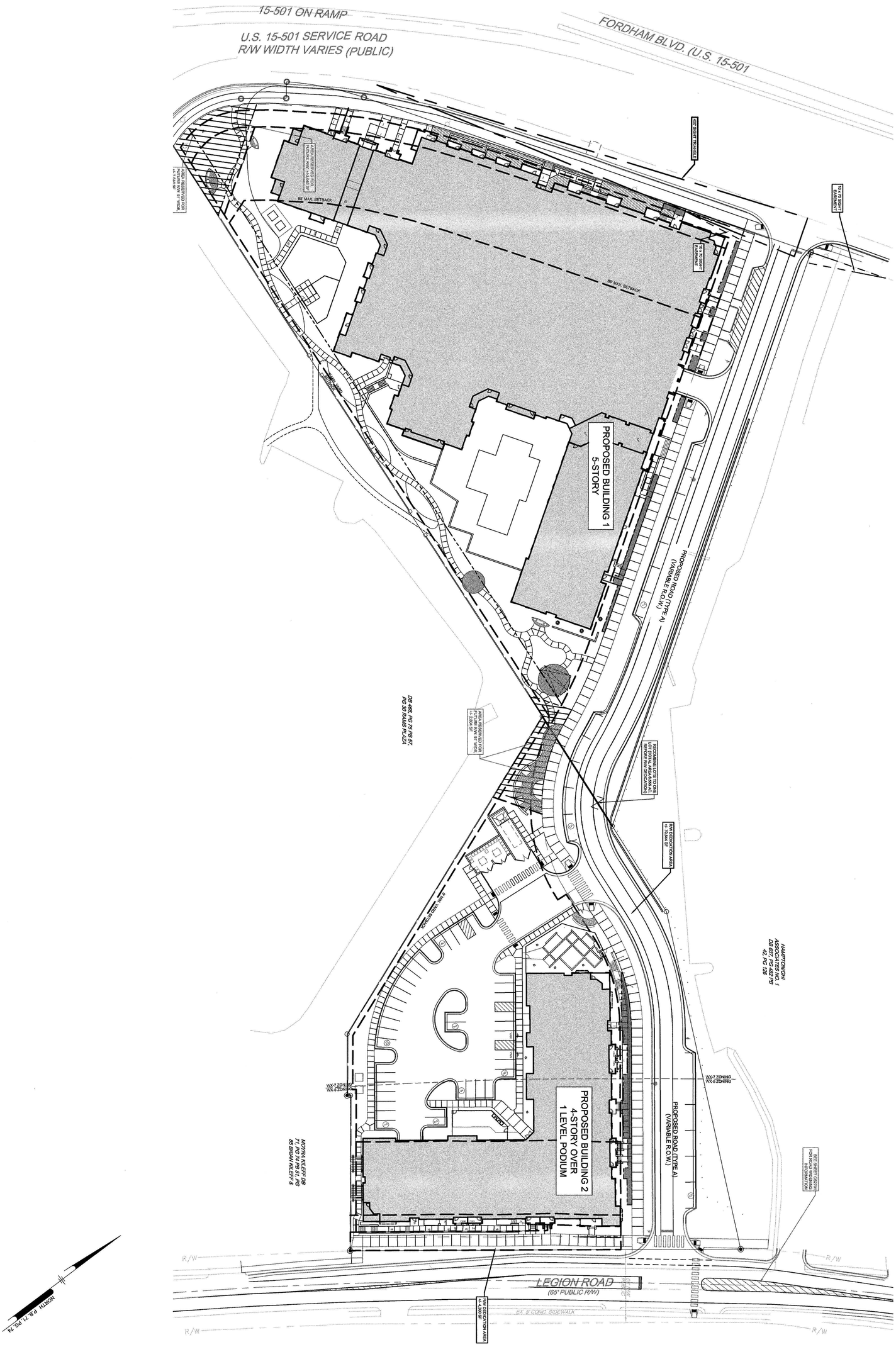

#	#	#	#
#	#	#	#
#	#	#	#
#	#	#	#
#	#	#	#
4/7/2017	2	TOWN COMMENT REVISIONS REVIEW #2	WRA
2/20/2017	1	REVISIONS PER TOWN'S REVIEW COMMENTS	WRA
DATE	NO.	REVISIONS	BY

ALL DOCUMENTS PREPARED BY PENNONI ASSOCIATES ARE INSTRUMENTS OF SERVICE IN RESPECT TO THE PROJECT. THEY ARE NOT INTENDED OR REPRESENTED TO BE SUITABLE FOR REUSE BY OWNER OR OTHERS ON THE EXTENSIONS OF THE PROJECT OR ON ANY OTHER PROJECT. ANY REUSE WITHOUT WRITTEN VERIFICATION OR ADAPTATION BY PENNONI ASSOCIATES FOR THE SPECIFIC PURPOSE INTENDED WILL BE AT OWNER'S SOLE RISK AND WITHOUT LIABILITY OR LEGAL EXPOSURE TO PENNONI ASSOCIATES. OWNER SHALL INDEMNIFY AND HOLD HARMLESS PENNONI ASSOCIATES FROM ALL CLAIMS, DAMAGES, LOSSES AND EXPENSES ARISING OUT OF OR RESULTING THEREFROM.

PROJECT: LCGR1602
DATE: DECEMBER 7, 2016
DRAWING SCALE: 1" = 30'
DRAWN BY: WRA
APPROVED BY: TAS

CS3601
SHEET 18 OF 26

HILLSTONE CHAPEL HILL
1730 FORDHAM BLVD.
CHAPEL HILL, NORTH CAROLINA 27514

EASEMENTS AND RIGHT-OF-WAY PLAN

LEON CAPITAL GROUP
5970 FAIRVIEW ROAD, SUITE 450
CHARLOTTE, NORTH CAROLINA 28210

ALL DIMENSIONS MUST BE VERIFIED BY CONTRACTOR AND OWNER MUST BE NOTIFIED OF ANY DISCREPANCIES BEFORE PROCEEDING WITH WORK

PHILIP POST & ASSOCIATES
A Division of Pennoni Firm License F-1267
PENNONI ASSOCIATES INC.
401 Providence Road #200
Chapel Hill, NC 27514
T 919.929.1173 F 919.493.6548

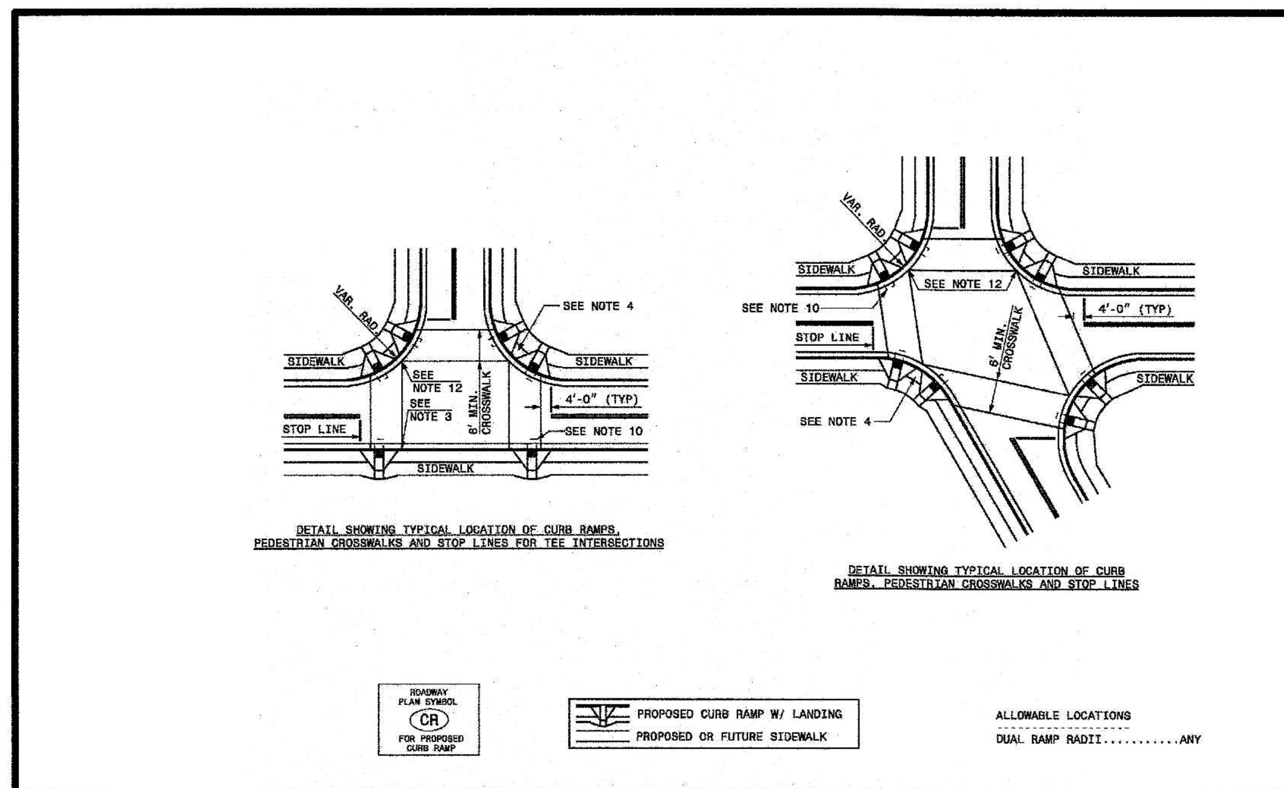

1-12 STATE OF NORTH CAROLINA DEPT. OF TRANSPORTATION DIVISION OF HIGHWAYS RALEIGH, N.C.

ENGLISH STANDARD DRAWING FOR **CURB RAMP** PROPOSED CURB AND GUTTER

SHEET 2 OF 3 **848.05**

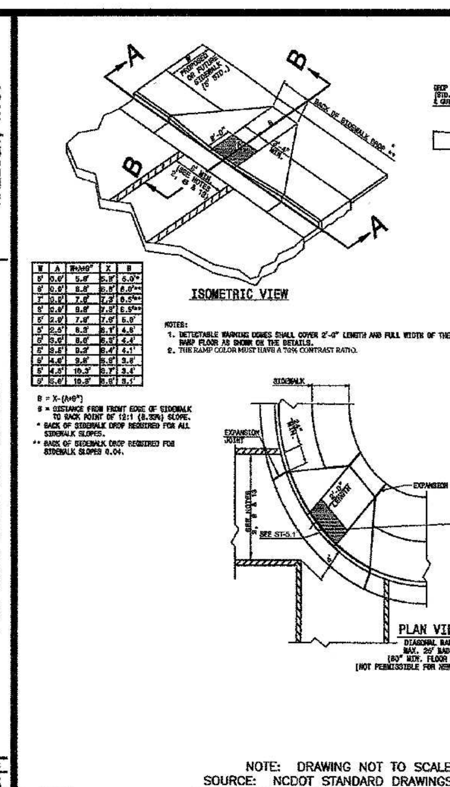

TITLE:	REVISIONS		DET.NO.
ACCESSIBLE RAMP	09/03 02/08	JH ER	ST - 5.3

ENGINEERING DEPARTMENT STANDARD DETAILS

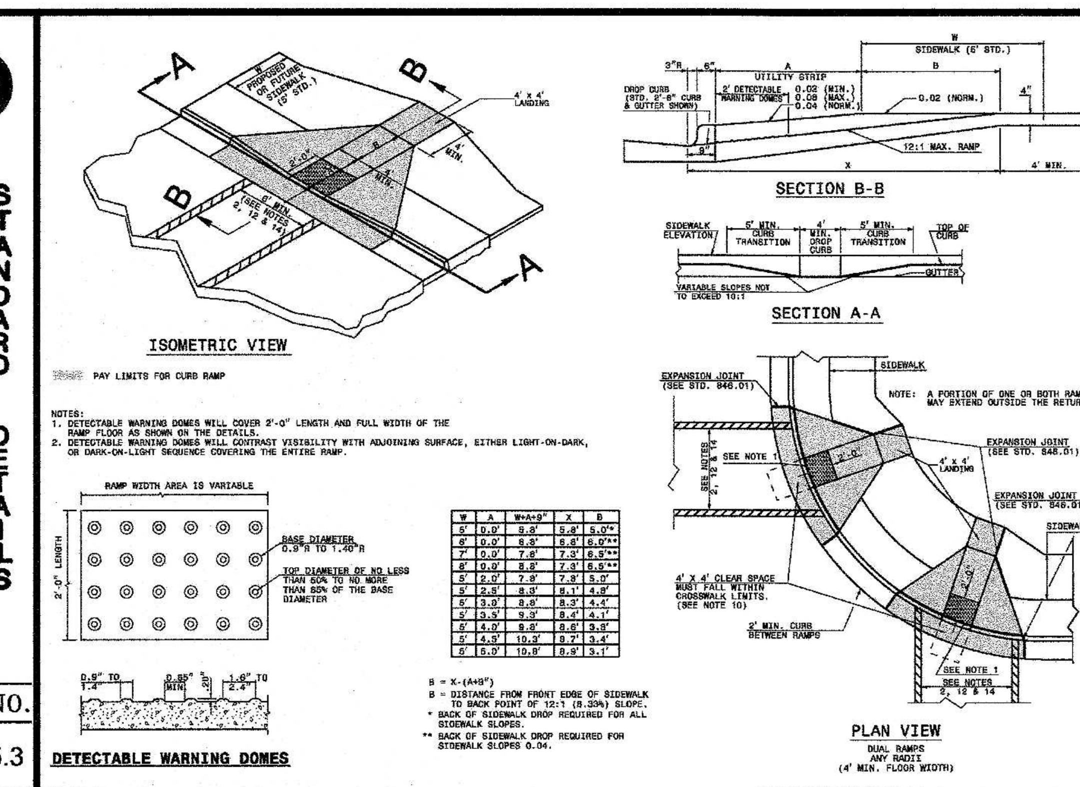

1-12 STATE OF NORTH CAROLINA DEPT. OF TRANSPORTATION DIVISION OF HIGHWAYS RALEIGH, N.C.

ENGLISH STANDARD DRAWING FOR **CURB RAMP** PROPOSED CURB AND GUTTER

SHEET 1 OF 3 **848.05**

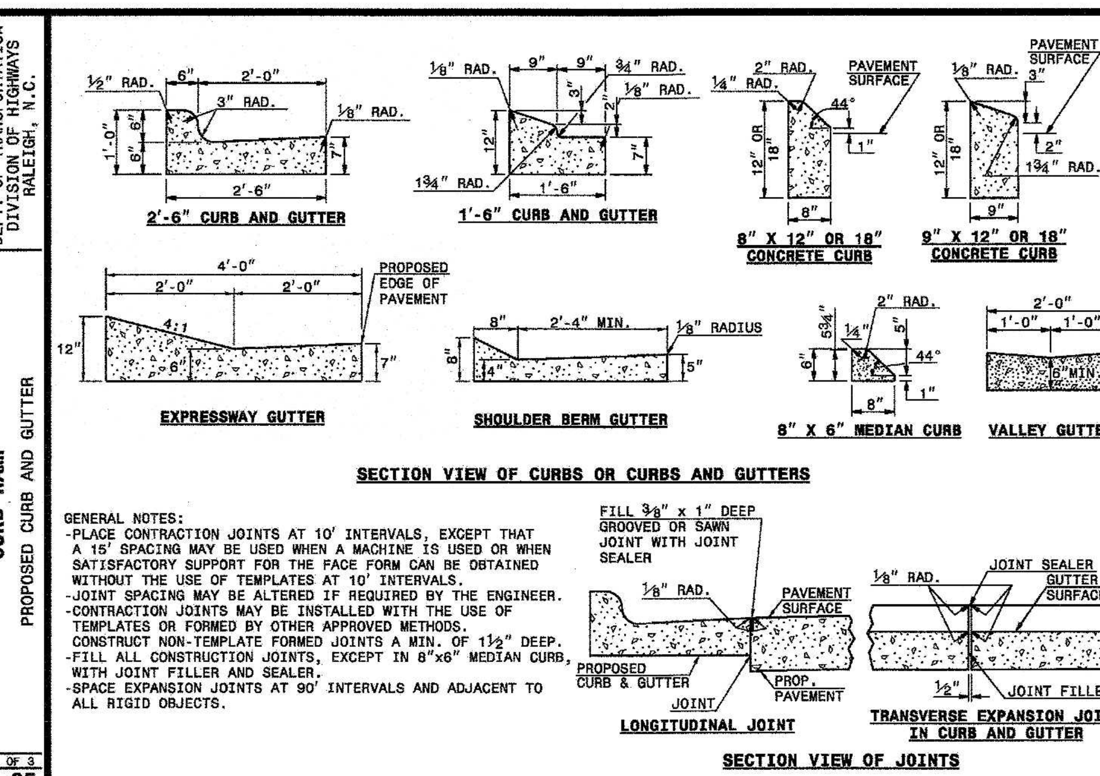

GENERAL NOTES:
- PLACE CONTRACTION JOINTS AT 10' INTERVALS, EXCEPT THAT A 15' SPACING MAY BE USED WHEN A MACHINE IS USED OR WHEN SATISFACTORY SUPPORT FOR THE FACE FORM CAN BE OBTAINED WITHOUT THE USE OF TEMPLATES AT 10' INTERVALS.
- JOINT SPACING MAY BE ALTERED IF REQUIRED BY THE ENGINEER.
- CONTRACTION JOINTS MAY BE INSTALLED WITH THE USE OF TEMPLATES OR FORMED BY OTHER APPROVED METHODS. CONSTRUCT NON-TEMPLATE FORMED JOINTS A MIN. OF 1½" DEEP.
- FILL ALL CONSTRUCTION JOINTS, EXCEPT IN 8"x6" MEDIAN CURB, WITH JOINT FILLER AND SEALER.
- SPACE EXPANSION JOINTS AT 90' INTERVALS AND ADJACENT TO ALL RIGID OBJECTS.

1-12 STATE OF NORTH CAROLINA DEPT. OF TRANSPORTATION DIVISION OF HIGHWAYS RALEIGH, N.C.

ENGLISH STANDARD DRAWING FOR **CONCRETE CURB, GUTTER AND CURB & GUTTER**

SHEET 1 OF 3 **846.01**

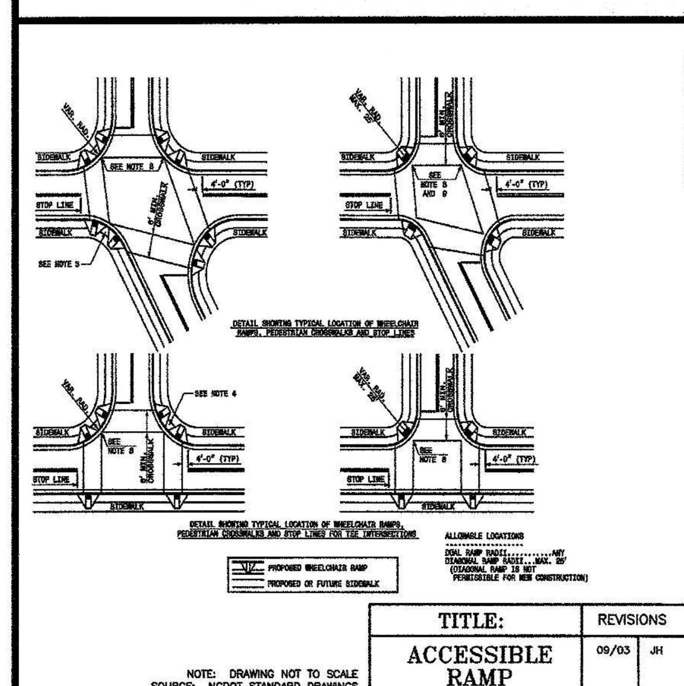

ENGINEERING DEPARTMENT STANDARD DETAILS

TITLE:	REVISIONS		DET.NO.
ACCESSIBLE RAMP	09/03	JH	ST - 5.2

NOTE: DRAWING NOT TO SCALE
SOURCE: NCDOT STANDARD DRAWINGS

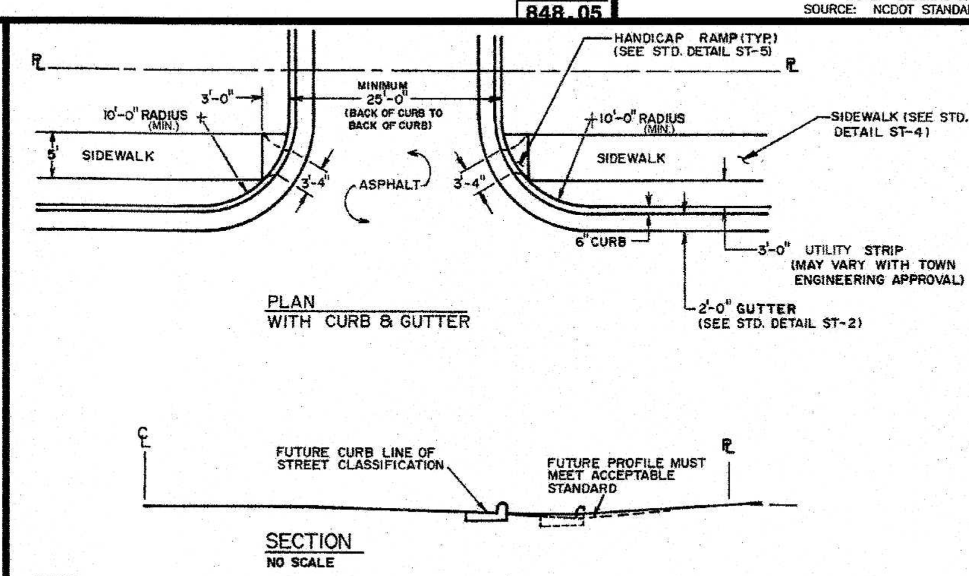

NOTES:
1. FOR COMMERCIAL & MULTI-FAMILY USES ONLY.
2. DRIVES TO BE GRADED TO DRAIN TOWARD STREET FROM PROPERTY LINE & AWAY FROM STREET FROM PROPERTY LINE UNLESS STORM DRAINAGE STRUCTURES ARE PROVIDED TO INTERCEPT STORM FLOWS.
3. DRIVE GRADE PROFILE SHALL BE DESIGNED TO TIE IN WITH ULTIMATE WIDENING OF STREET.

NO SCALE

TITLE	REVISIONS			DET.NO.
DRIVEWAY-STREET TYPE, CURB & GUTTER SECTION	NO	DATE	BY	D-3

ENGINEERING DEPARTMENT STANDARD DETAILS

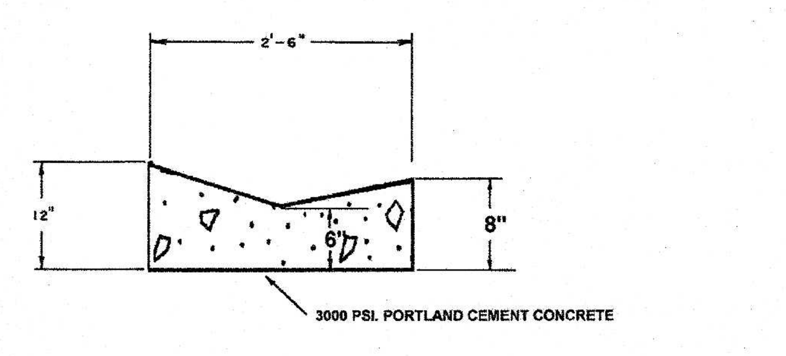

MANAGER'S PRIOR APPROVAL REQUIRED
FIRE LANE ENTRANCE

TITLE	REVISIONS			DET.NO.
VALLEY CURB AND GUTTER SECTION	NO	DATE	BY	ST-2C

ENGINEERING DEPARTMENT STANDARD DETAILS

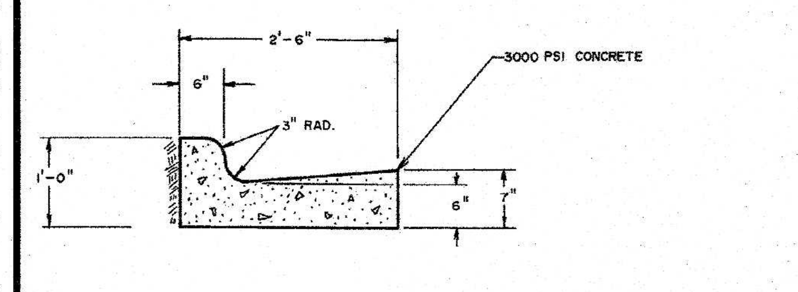

SCALE: 1"=1'-0"

TITLE	REVISIONS			DET.NO.
CURB & GUTTER SECTION	NO	DATE	BY	ST-2

ENGINEERING DEPARTMENT STANDARD DETAILS

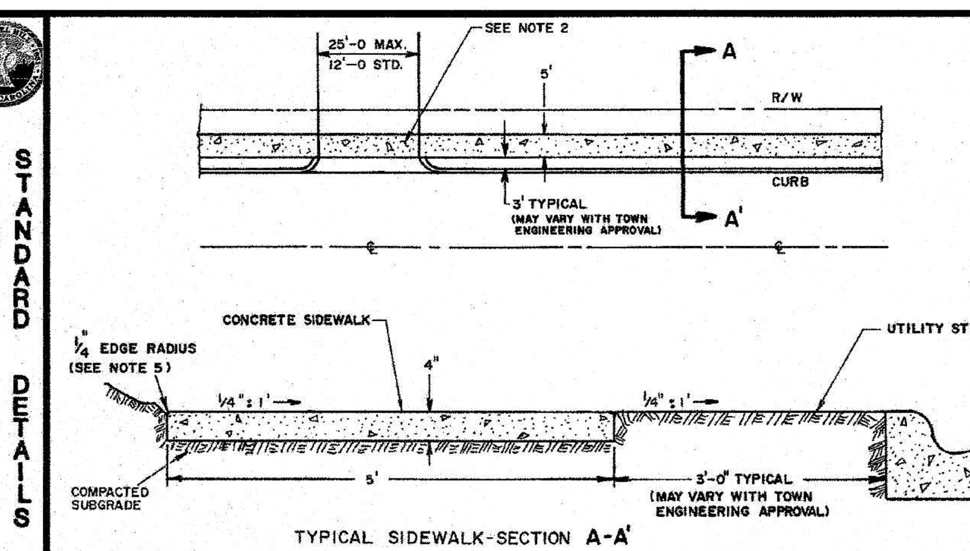

NOTES:
1. ALL CONCRETE 3000 PSI.
2. SEE STANDARD DETAIL "D-1" FOR THROUGH DRIVEWAY SPECIFICATIONS.
3. EXPANSION JOINTS 50' APART MAXIMUM.
4. CONTROL JOINT EVERY 5 FEET.
5. ALL SIDEWALKS SHALL BE CONSTRUCTED WITH TOOLED ¼" EDGE RADIUS.
6. IF UTILITY STRIP IS COMPLETELY ELIMINATED, SIDEWALK SHALL BE PLACED DIRECTLY AT BACK-OF-CURB, WITH ¼" EDGE RADIUS.

NO SCALE

TITLE	REVISIONS			DET.NO.
TYPICAL SIDEWALK	NO	DATE	BY	ST-4

ENGINEERING DEPARTMENT STANDARD DETAILS

NOTES:

1. CONSTRUCT THE WALKING SURFACE WITH SLIP RESISTANCE AND A 70% CONTRASTING COLOR TO THE SIDEWALK.
2. CROSSWALK WIDTHS AND CONFIGURATION MAY VARY BUT MUST CONFORM TO TRAFFIC DESIGN STANDARDS.
3. PROVIDE WHEELCHAIR RAMPS AT LOCATIONS AS SHOWN ON THE PLANS OR AS DIRECTED BY THE ENGINEER. LOCATE WHEELCHAIR RAMPS AS DIRECTED BY THE ENGINEER WHERE EXISTING LIGHT POLES, FIRE HYDRANTS, DROP INLETS, ETC. AFFECT PLACEMENT. WHERE TWO RAMPS ARE INSTALLED, PLACE NOT LESS THAN TWO FEET OF FULL HEIGHT CURB BETWEEN THE RAMPS. PLACE DUAL RAMPS AS PERPENDICULAR TO THE TRAVEL LANE BEING CROSSED AS POSSIBLE .
4. DO NOT EXCEED 0.08 (12:1) SLOPE ON THE WHEELCHAIR RAMP IN RELATIONSHIP TO THE GRADE OF THE STREET.
5. CONSTRUCT WHEELCHAIR RAMPS 40" (3'-4") OR GREATER FOR DUAL RAMPS AND 60" (5'-0") OR GREATER FOR DIAGONAL RAMPS.
6. USE CONCRETE WITH A SIDEWALK FINISH IN ORDER TO OBTAIN A ROUGH NON-SKID TYPE SURFACE.
7. PLACE A 1/2" EXPANSION JOINT WHERE THE CONCRETE WHEELCHAIR RAMP JOINS THE CURB AS SHOWN ON DETAIL ST-5A.
8. PLACE THE INSIDE PEDESTRIAN CROSSWALK LINES NO CLOSER IN THE INTERSECTION BY BISECTING THE INTERSECTION RADII, WITH ALLOWANCE OF A 4' CLEAR ZONE IN THE VEHICULAR TRAVELWAY WHEN ONE RAMP IS INSTALLED. (SEE NOTE 13)
9. COORDINATE THE CURB CUT AND THE PEDESTRIAN CROSSWALK LINES SO THE FLOOR OF THE WHEELCHAIR RAMP WILL FALL WITHIN THE PEDESTRIAN CROSSWALK LINES. PLACE DIAGONAL RAMPS WITH FLARED SIDES SO 24" OF FULL HEIGHT CURB FALLS WITHIN THE CROSSWALK MARKINGS ON EACH SIDE OF THE FLARES.
10. CONSTRUCT THE PEDESTRIAN CROSSWALK A MINIMUM OF 6 FEET. A CROSSWALK WIDTH OF 8 FEET OR GREATER IS DESIRABLE.
11. USE STOP LINES, NORMALLY PERPENDICULAR TO THE LANE LINES, WHERE IT IS IMPORTANT TO INDICATE THE POINT BEHIND WHICH VEHICLES ARE REQUIRED TO STOP IN COMPLIANCE WITH A TRAFFIC SIGNAL, STOP SIGN OR OTHER LEGAL REQUIREMENT. AN UNUSUAL APPROACH SKEW MAY REQUIRE THE PLACEMENT OF THE STOP LINE TO BE PARALLEL TO THE INTERSECTION ROADWAY.
12. TERMINATE PARKING A MINIMUM OF 20 FEET BACK OF PEDESTRIAN CROSSWALK.
13. PLACE ALL PAVEMENT MARKINGS IN ACCORDANCE WITH THE LATEST EDITION OF THE MANUAL OF UNIFORM TRAFFIC CONTROL DEVICES (MUTCD) PUBLISHED BY THE FEDERAL HIGHWAY ADMINISTRATION AND THE NORTH CAROLINA SUPPLEMENT TO THE MUTCD.

SOURCE: NCDOT STANDARD DRAWINGS

TITLE:	REVISIONS		DET.NO.
ACCESSIBLE RAMP	09/03	JH	ST - 5.4

ENGINEERING DEPARTMENT STANDARD DETAILS

NOTES:
1. CONSTRUCT THE RAMP SURFACE TO BE STABLE, FIRM, AND SLIP RESISTANT. CONSTRUCT THE CURB RAMP TYPE AS SHOWN IN THE PAVEMENT MARKING PLANS OR AS DIRECTED BY THE ENGINEER.
2. LOCATE CURB RAMPS AND PLACE PEDESTRIAN CROSSWALK MARKINGS AS SHOWN IN THE PAVEMENT MARKING PLANS. WHEN FIELD ADJUSTMENTS REQUIRE MOVING CURB RAMPS OR MARKINGS AS SHOWN, CONTACT THE SIGNING AND DELINEATION UNIT OR LOCATE AS DIRECTED BY THE ENGINEER.
3. COORDINATE THE CURB RAMP AND THE PEDESTRIAN CROSSWALK MARKINGS SO A 4'x4' CLEAR SPACE AT THE BASE OF THE CURB RAMP WILL FALL WITHIN THE PEDESTRIAN CROSSWALK LINES.
4. SET BACK DISTANCE FROM INSIDE CROSSWALK MARKING TO NEAREST EDGE OF TRAVEL LANE IS 4' MINIMUM.
5. REFER TO THE PAVEMENT MARKING PLANS FOR STOP BAR LOCATIONS AT SIGNALIZED INTERSECTIONS. IF A PAVEMENT MARKING PLAN IS NOT PROVIDED, CONTACT THE SIGNAL DESIGN SECTION FOR THE STOP BAR LOCATIONS OR LOCATE AS DIRECTED BY THE ENGINEER.
6. TERMINATE PARKING A MINIMUM OF 20' BACK OF A PEDESTRIAN CROSSWALK.
7. CONSTRUCT CURB RAMPS A MINIMUM OF 4' WIDE.
8. CONSTRUCT THE RUNNING SLOPE OF THE RAMP 8.33% MAXIMUM.
9. ALLOWABLE CROSS SLOPE ON SIDEWALKS AND CURB RAMPS WILL BE 2% MAXIMUM.
10. CONSTRUCT THE SIDE FLARE SLOPE A MAXIMUM OF 10% MEASURED ALONG THE CURB LINE.
11. CONSTRUCT THE COUNTER SLOPE OF THE GUTTER OR STREET AT THE BASE OF THE CURB RAMP A MAXIMUM OF 5% AND MAINTAIN A SMOOTH TRANSITION.
12. CONSTRUCT LANDINGS FOR SIDEWALK A MINIMUM OF 4'x4' WITH A MAXIMUM SLOPE OF 2% IN ANY DIRECTION. CONSTRUCT LANDINGS FOR MEDIAN ISLANDS A MINIMUM OF 5'x5' WITH A MAXIMUM SLOPE OF 2% IN ANY DIRECTION.
13. TO USE A MEDIAN ISLAND AS A PEDESTRIAN REFUGE AREA, MEDIAN ISLANDS WILL BE A MINIMUM OF 6' WIDE. CONSTRUCT MEDIAN ISLANDS TO PROVIDE PASSAGE OVER OR THROUGHT THE ISLAND.
14. SMALL CHANNELIZATION ISLANDS THAT CAN NOT PROVIDE A 5'X5' LANDING AT THE TOP OF A RAMPS, WILL BE CUT THROUGH LEVEL WITH THE SURFACE STREET.
15. CURB RAMPS WITH RETURNED CURBS MAY BE USED ONLY WHERE PEDESTRIANS WOULD NOT NORMALLY WALK ACROSS THE RAMP. THE ADJACENT SURFACE IS PLANTING OR OTHER NON-WALKING SURFACE OR THE SIDE APPROACH IS SUBSTANTIALLY OBSTRUCTED.
16. PLACE A ½" EXPANSION JOINT WHERE THE CONCRETE CURB RAMP JOINS THE CURB AS SHOWN IN ROADWAY STANDARD DRAWING 848.01
17. PLACE ALL PEDESTRIAN PUSH BUTTON ACTUATORS AND CROSSING SIGNALS AS SHOWN IN THE PLANS OR AS SHOWN IN THE MUTCD.
18. CURB RAMPS THROUGH MEDIAN ISLANDS, SINGLE RAMPS AT DUAL CROSSWALKS OR LIMITED R/W SITUATIONS, WILL BE HANDLED BY SPECIAL DETAILS. CONTACT THE CONTRACT STANDARDS AND DEVELOPMENT UNIT FOR THE DETAILS OR FOR A SPECIAL DESIGN.

1-12 STATE OF NORTH CAROLINA DEPT. OF TRANSPORTATION DIVISION OF HIGHWAYS RALEIGH, N.C.

ENGLISH STANDARD DRAWING FOR **CURB RAMPS** NOTES

SHEET 3 OF 3 **848.05**

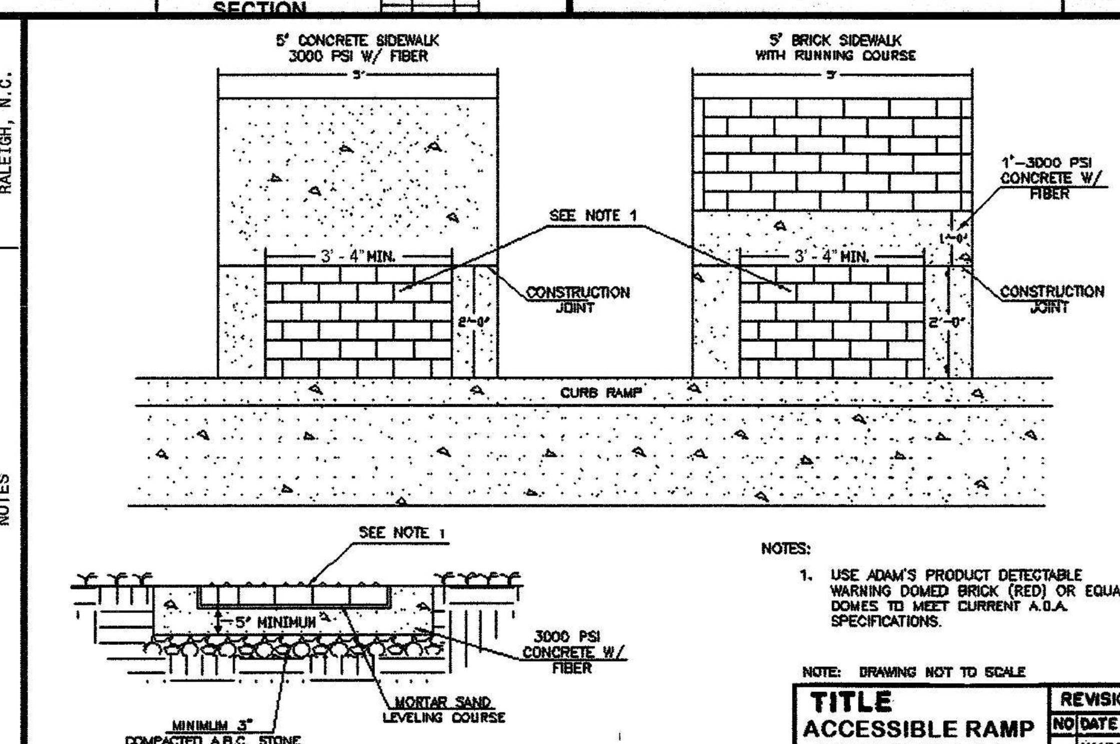

NOTES:
1. USE ADAM'S PRODUCT DETECTABLE WARNING DOMED BRICK (RED) OR EQUAL. DOMES TO MEET CURRENT A.D.A. SPECIFICATIONS.

NOTE: DRAWING NOT TO SCALE

TITLE	REVISIONS			DET.NO
ACCESSIBLE RAMP WITH DETECTABLE WARNING DOMES	NO	DATE	BY	ST-5.1
		4/11/06	MCR	
		5/8/07	LRT	

ENGINEERING DEPARTMENT STANDARD DETAILS

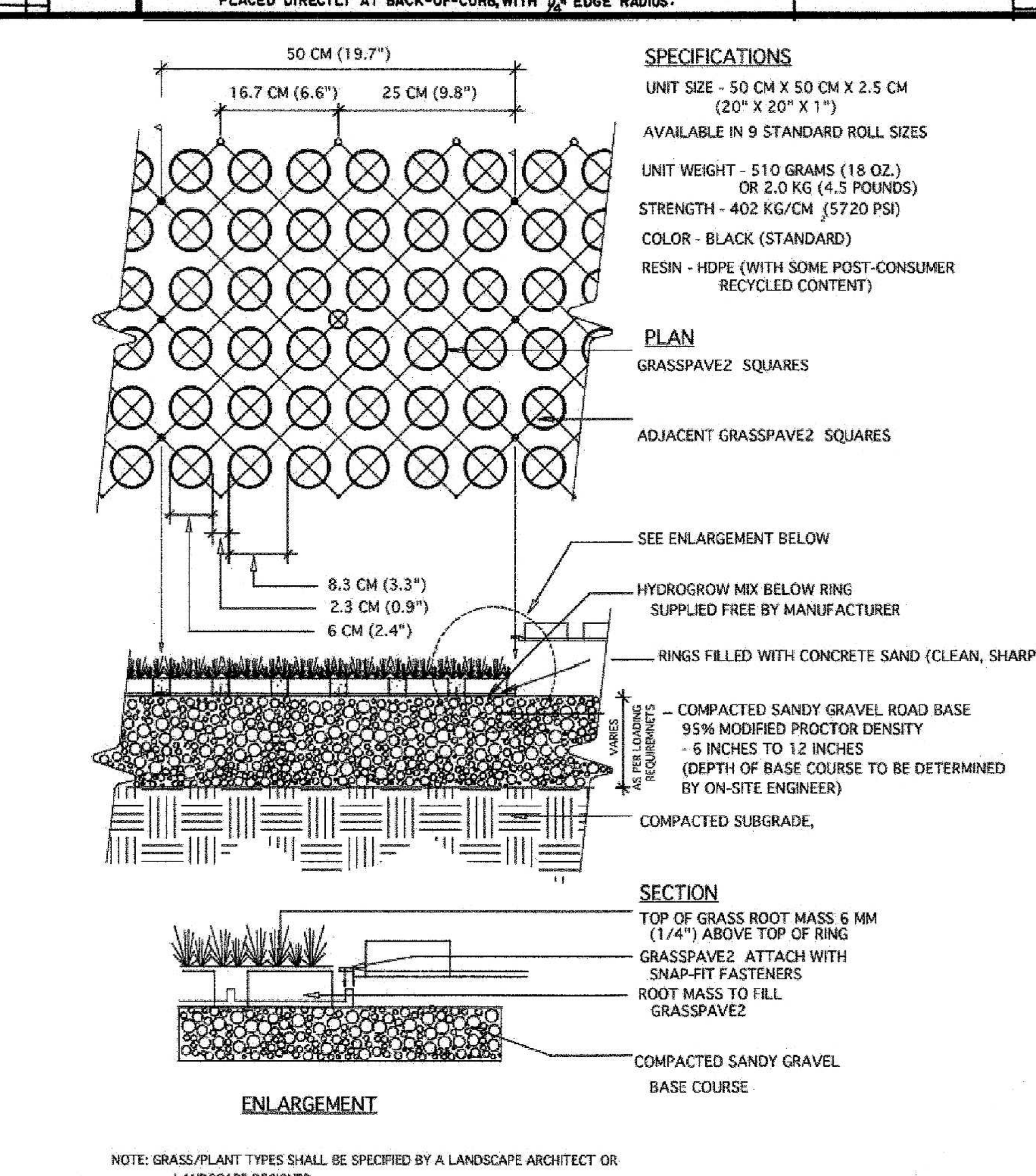

SPECIFICATIONS
UNIT SIZE - 50 CM X 50 CM X 2.5 CM (20" X 20" X 1")
AVAILABLE IN 9 STANDARD ROLL SIZES
UNIT WEIGHT - 510 GRAMS (18 OZ.) OR 2.0 KG (4.5 POUNDS)
STRENGTH - 402 KG/CM (5720 PSI)
COLOR - BLACK (STANDARD)
RESIN - HDPE (WITH SOME POST-CONSUMER RECYCLED CONTENT)

NOTE: GRASS/PLANT TYPES SHALL BE SPECIFIED BY A LANDSCAPE ARCHITECT OR LANDSCAPE DESIGNER.

TYPICAL GRASSPAVE2 DETAIL

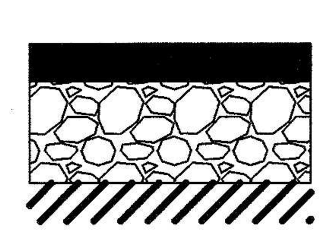

TYPICAL PAVING SECTION

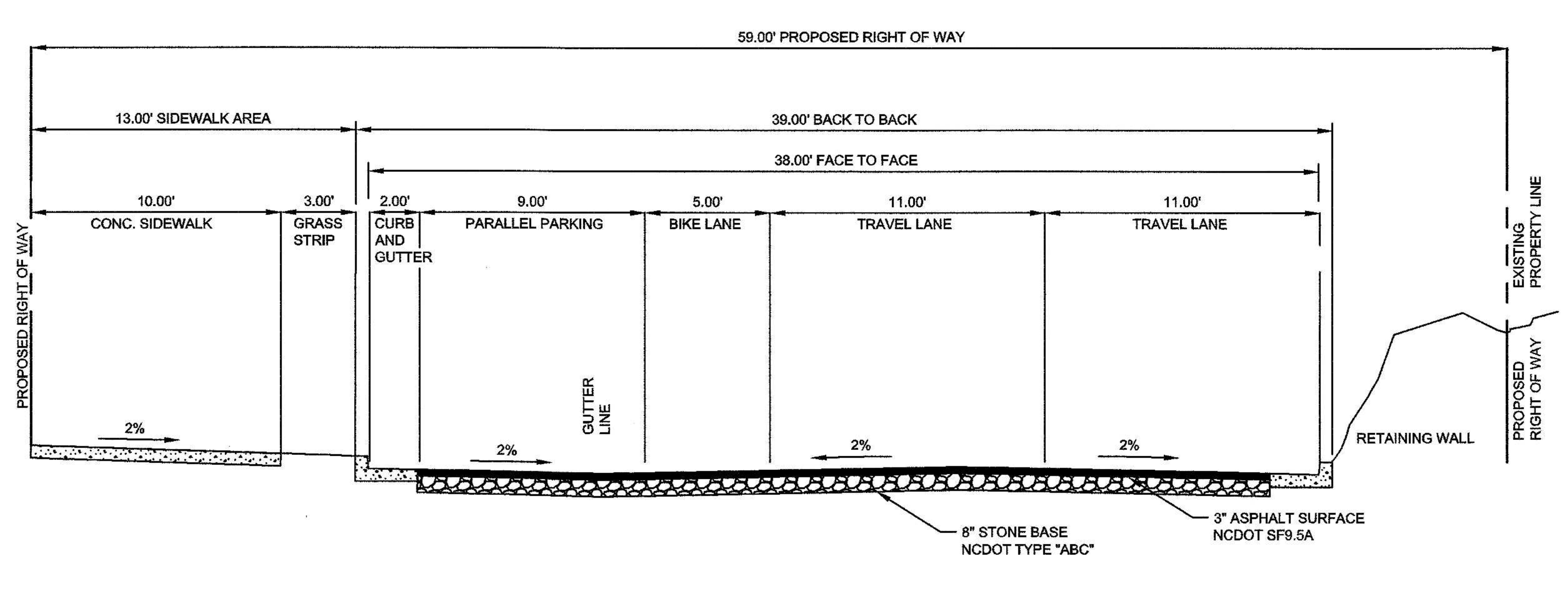

TYPICAL SECTION WITH PARALLEL PARKING
1" = 5'

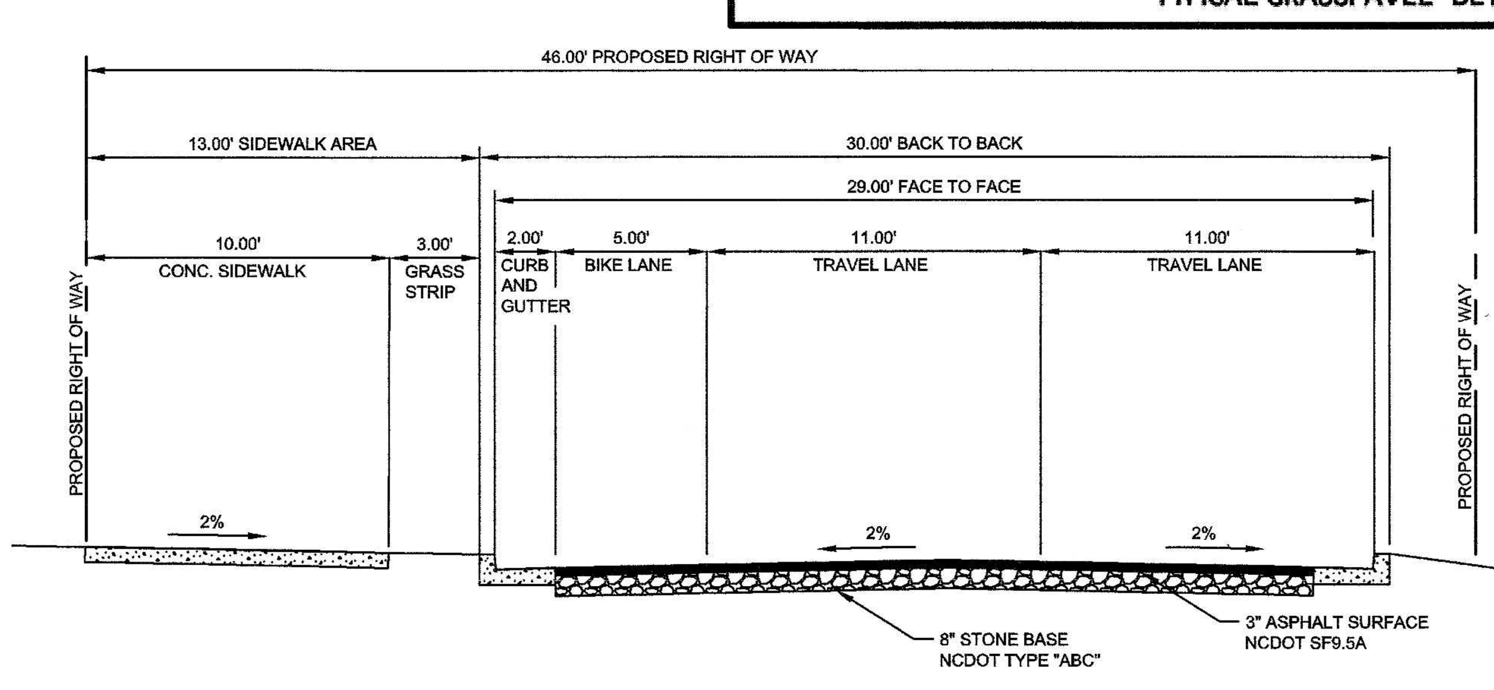

TYPICAL SECTION WITHOUT PARALLEL PARKING
1" = 5'

P:\Projects\LCGRCOM\LCGR1602-Apartment Site\DESIGN_PUBLISH\CS6001.dwg PLOTTED: 4/10/2017 12:50 PM, BY: Donald Chitty PLOTSTYLE: Pennoni NCS.stb PROJECT STATUS: DESIGN DEVELOPMENT

PHILIP POST & ASSOCIATES
A Division of Pennoni
Firm License F-1267
PENNONI ASSOCIATES INC.
401 Providence Road #200
Chapel Hill, NC 27514
T 919.929.1173 F 919.493.6548

ALL DIMENSIONS MUST BE VERIFIED BY CONTRACTOR AND OWNER MUST BE NOTIFIED OF ANY DISCREPANCIES BEFORE PROCEEDING WITH WORK

NOT FOR CONSTRUCTION

SEAL 030517 ENGINEER TIMOTHY A. SMITH 4-10-17

HILLSTONE CHAPEL HILL
1730 FORDHAM BLVD.
CHAPEL HILL, NORTH CAROLINA 27514

SITE DETAILS

LEON CAPITAL GROUP
5970 FAIRVIEW ROAD, SUITE 450
CHARLOTTE, NORTH CAROLINA 28210

DATE	NO.	REVISIONS	BY
4/7/2017	2	TOWN COMMENT REVISIONS REVIEW #2	WRA
2/20/2017	1	REVISIONS PER TOWN'S REVIEW COMMENTS	WRA

ALL DOCUMENTS PREPARED BY PENNONI ASSOCIATES ARE INSTRUMENTS OF SERVICE IN RESPECT OF THE PROJECT. THEY ARE NOT INTENDED OR REPRESENTED TO BE SUITABLE FOR REUSE BY OWNER OR OTHERS ON THE EXTENSIONS OF THE PROJECT OR ON ANY OTHER PROJECT. ANY REUSE WITHOUT WRITTEN VERIFICATION OR ADAPTATION BY PENNONI ASSOCIATES FOR THE SPECIFIC PURPOSE INTENDED WILL BE AT OWNERS SOLE RISK AND WITHOUT LIABILITY OR LEGAL EXPOSURE TO PENNONI ASSOCIATES; AND OWNER SHALL INDEMNIFY AND HOLD HARMLESS PENNONI ASSOCIATES FROM ALL CLAIMS, DAMAGES, LOSSES AND EXPENSES ARISING OUT OF OR RESULTING THEREFROM.

PROJECT	LCGR1602
DATE	DECEMBER 7, 2016
DRAWING SCALE	1" = 30'
DRAWN BY	WRA
APPROVED BY	TAS

CS6001

ENGLISH STANDARD DRAWING FOR CONCRETE CATCH BASIN 12" THRU 54" PIPE

STATE OF NORTH CAROLINA DEPT. OF TRANSPORTATION DIVISION OF HIGHWAYS RALEIGH, N.C.

1-12

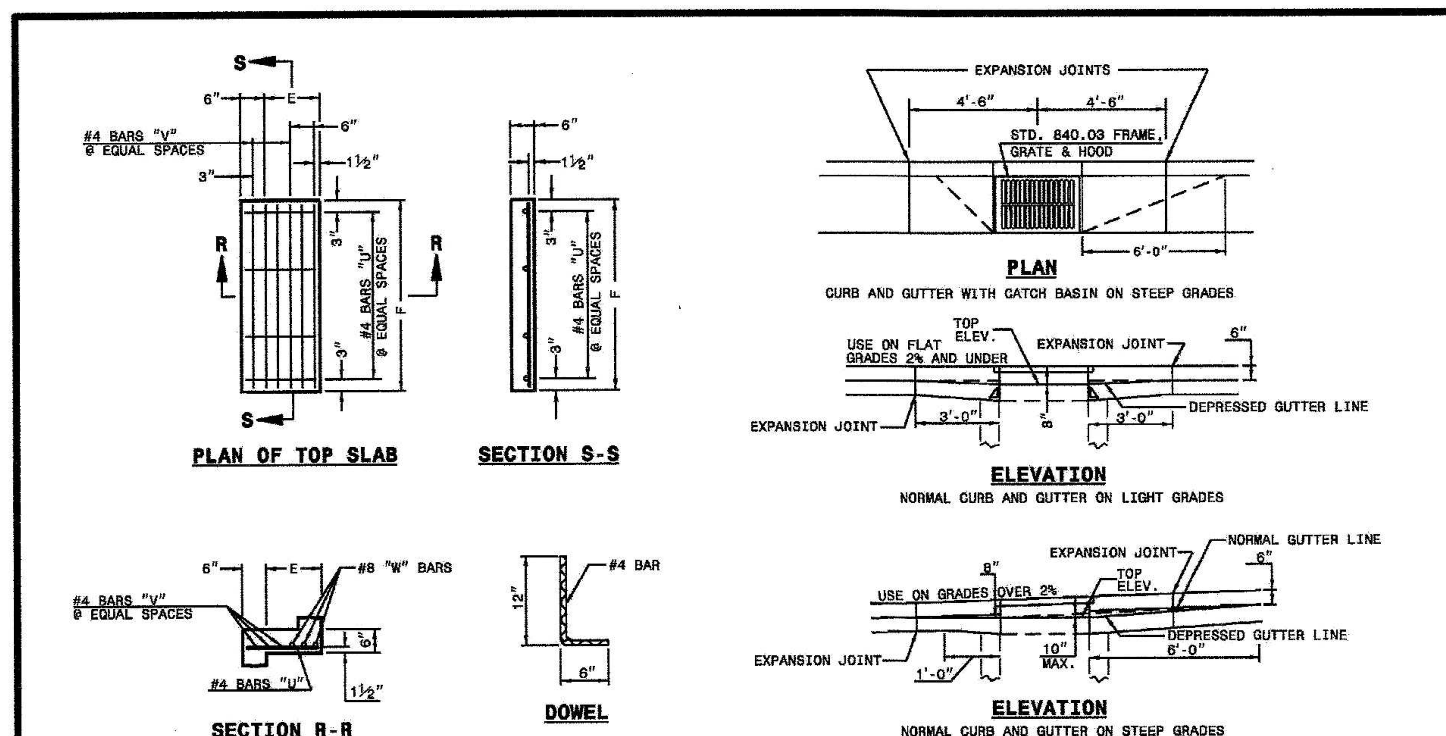

MINIMUM DIMENSIONS AND QUANTITIES FOR CONCRETE CATCH BASIN(BASED ON MIN. HEIGHT, H, WITH NO RISER) *

DIMENSIONS OF BOX AND PIPE						COVER DIMENSION		BARS-U		BARS-V		BARS-W		TOTAL LBS.	CU.YDS. CONC. IN BOX			DEDUCTIONS ONE PIPE	
PIPE D	SPAN A	WIDTH B	WIDTH C	SPAN G	MIN. HEIGHT H	E	F	NO.	LENGTH	NO.	LENGTH	NO.	LENGTH		TOP SLAB	BOTTOM SLAB	TOT. CONC. FOR MINIMUM HEIGHT, H	C.M.	R.C.
12"	3'-0"	2'-2"	--	--	2'-9"	--	--	--	--	--	--	--	--	--	--	0.235	0.772	0.015	0.026
15"	3'-0"	2'-2"			3'-0"											0.235	0.829	0.023	0.036
18"	3'-0"	2'-2"			3'-3"											0.235	0.887	0.033	0.049
24"	3'-0"	2'-2"			3'-9"											0.235	1.001	0.059	0.085
30"	3'-0"	2'-2"	3'-4"		4'-3"	1'-2"	4'-0"	4	1'-5"	2	3'-9"	3	3'-9"	39	0.123	0.321	1.433	0.092	0.127
36"	3'-0"	2'-2"	3'-10"		4'-9"	1'-8"	4'-0"	4	1'-11"	3	3'-9"	3	3'-9"	43	0.161	0.358	1.714	0.132	0.178
42"	3'-0"	2'-2"		4'-5"	5'-3"	1'-5"	3'-2"	4	1'-8"	2	2'-11"	3	2'-11"	32	0.112	0.318	1.738	0.180	0.243
48"	3'-0"	2'-2"		5'-0"	5'-9"	2'-0"	3'-2"	4	2'-3"	3	2'-11"	3	2'-11"	35	0.145	0.352	2.052	0.235	0.317
54"	3'-0"	2'-2"		5'-7"	6'-3"	2'-7"	3'-2"	4	2'-10"	5	2'-11"	3	2'-11"	41	0.180	0.386	2.387	0.297	0.401

* RISER HAS .228 CUBIC YARDS OF CONCRETE PER FOOT HEIGHT

SHEET 2 OF 2

840.02

ENGLISH STANDARD DRAWING FOR CONCRETE CATCH BASIN 12" THRU 54" PIPE

STATE OF NORTH CAROLINA DEPT. OF TRANSPORTATION DIVISION OF HIGHWAYS RALEIGH, N.C.

1-12

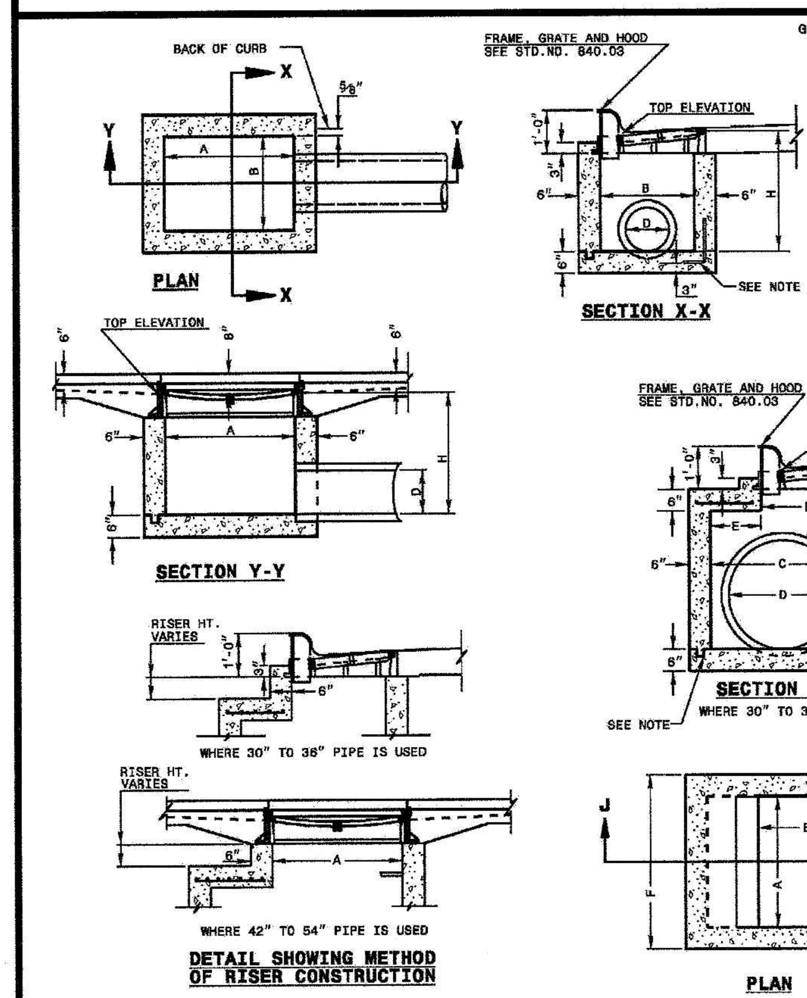

GENERAL NOTES:

USE CLASS "B" CONCRETE THROUGHOUT.

PROVIDE ALL CATCH BASINS OVER 3'-6" IN DEPTH WITH STEPS 12" ON CENTER. USE STEPS WHICH COMPLY WITH STD. DRAWING 840.66.

OPTIONAL CONSTRUCTION - MONOLITHIC POUR, 2" KEYWAY, OR #4 BAR DOWELS AT 12" CENTERS AS DIRECTED BY THE ENGINEER.

USE FORMS FOR THE CONSTRUCTION OF THE BOTTOM SLAB.

IF REINFORCED CONCRETE PIPE IS SET IN BOTTOM SLAB OF BOX, ADD TO SLAB AS SHOWN ON STD. NO. 840.00.

USE TYPE "E", "F" AND "G" GRATES UNLESS OTHERWISE INDICATED.

FOR 8'-0" IN HEIGHT OR LESS USE 6" WALLS AND BOTTOM SLAB. OVER 8'-0" TO 16'-0" IN HEIGHT USE 8" WALLS AND BOTTOM SLAB. ADJUST QUANTITIES ACCORDINGLY.

CONSTRUCT WITH PIPE CROWNS MATCHING.

CHAMFER ALL EXPOSED CORNERS 1".

DRAWING NOT TO SCALE.

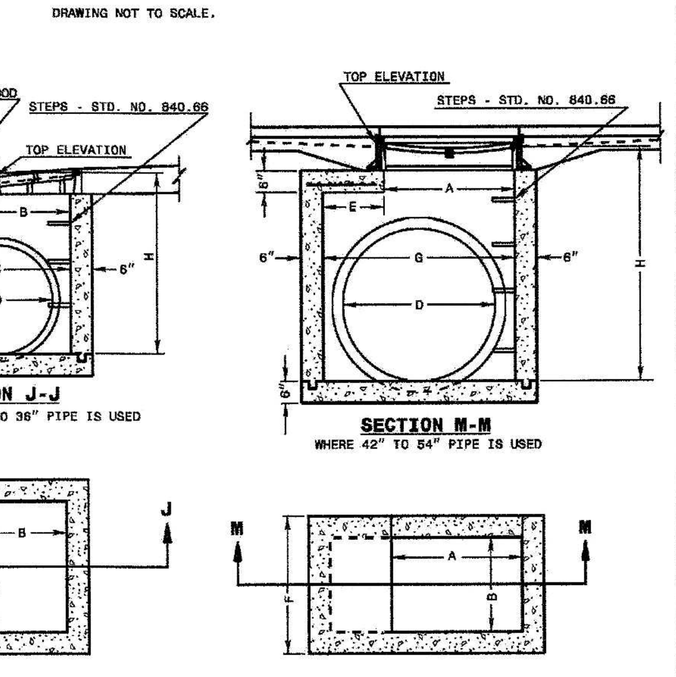

SHEET 1 OF 2

840.02

ENGLISH STANDARD DRAWING FOR FRAME, GRATES, AND HOOD FOR USE ON STANDARD CATCH BASIN

STATE OF NORTH CAROLINA DEPT. OF TRANSPORTATION DIVISION OF HIGHWAYS RALEIGH, N.C.

1-12

NOTE: USE TYPE "E", "F" AND "G" GRATE UNLESS OTHERWISE NOTED.

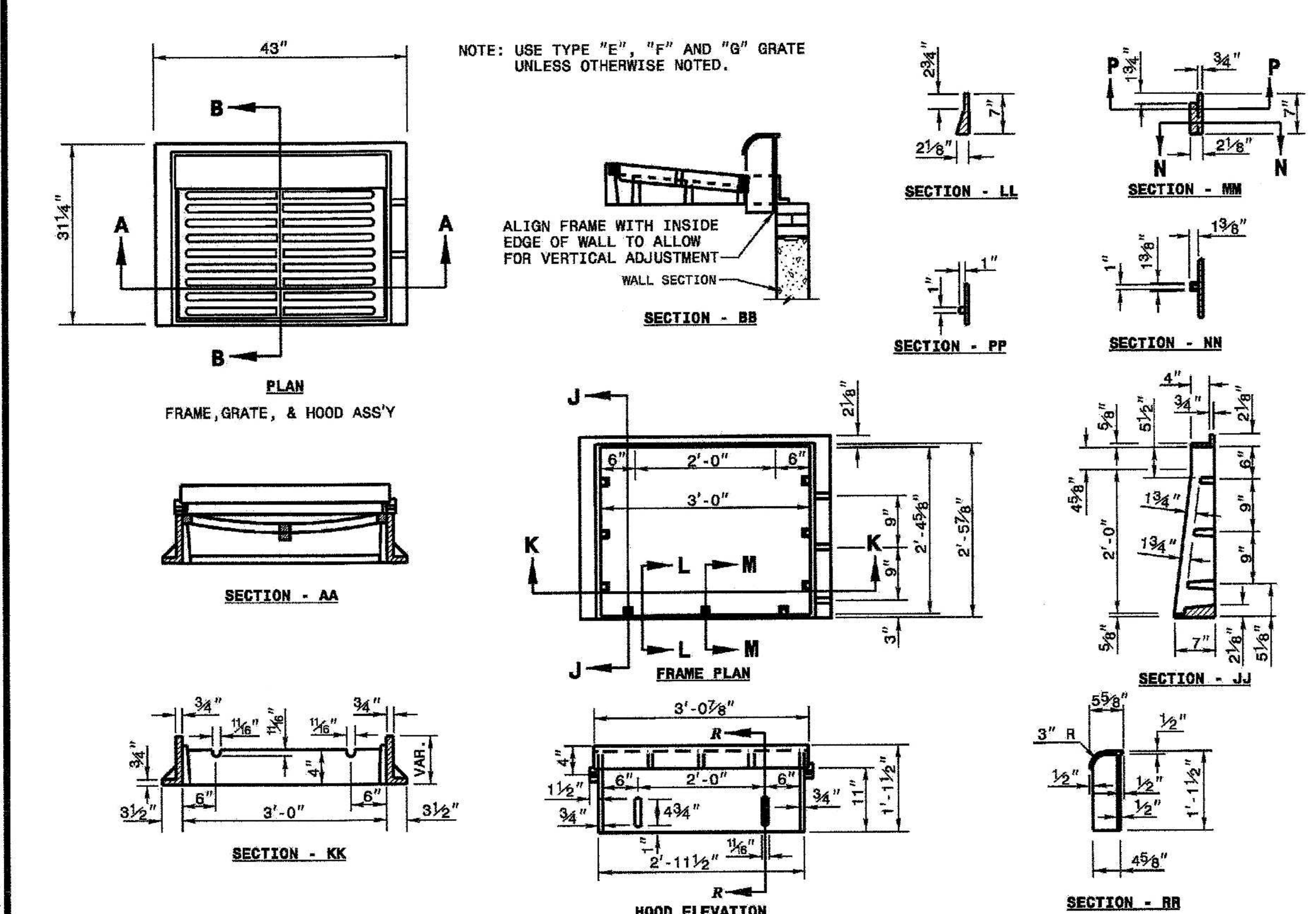

SHEET 1 OF 2

840.03

ENGLISH STANDARD DRAWING FOR FRAME, GRATES, AND HOOD FOR USE ON STANDARD CATCH BASIN

STATE OF NORTH CAROLINA DEPT. OF TRANSPORTATION DIVISION OF HIGHWAYS RALEIGH, N.C.

1-12

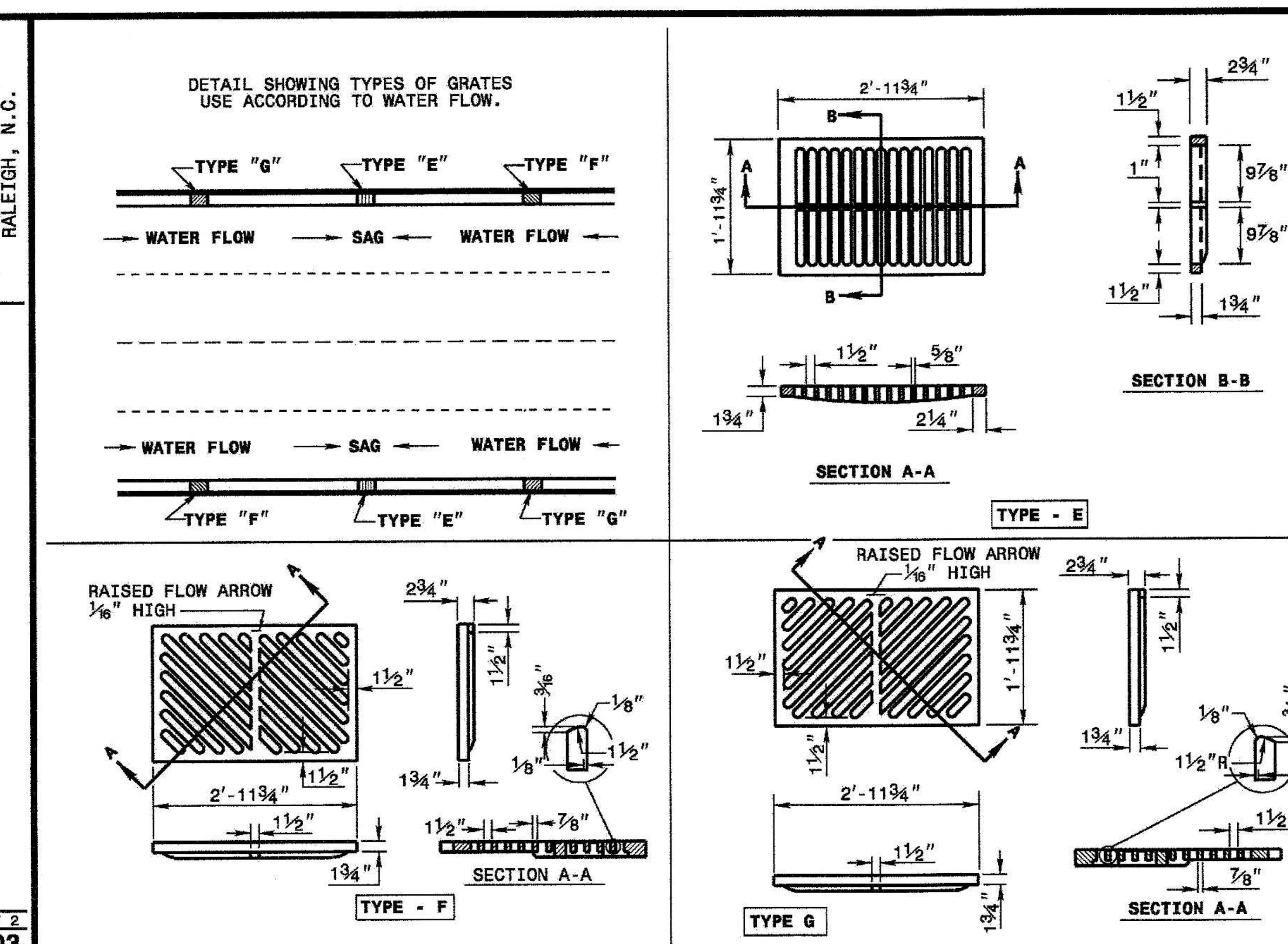

SHEET 2 OF 2

840.03

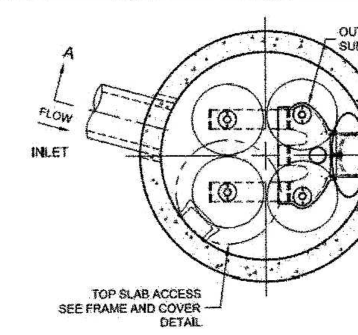

PLAN VIEW
STANDARD OUTLET RISER
FLOWKIT: 41A

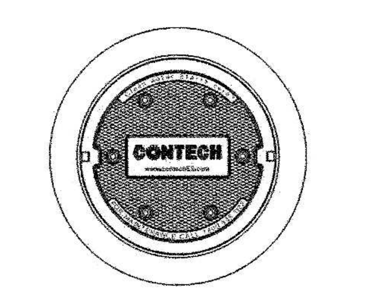

FRAME AND COVER
(DIAMETER VARIES)
N.T.S.

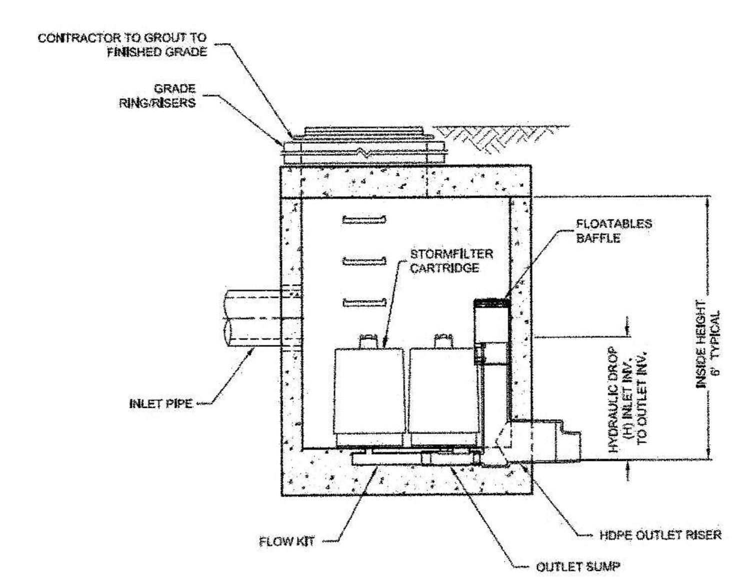

SECTION A-A

GENERAL NOTES
1. CONTECH TO PROVIDE ALL MATERIALS UNLESS NOTED OTHERWISE.
2. DIMENSIONS MARKED WITH ( ) ARE REFERENCE DIMENSIONS. ACTUAL DIMENSIONS MAY VARY.
3. FOR SITE SPECIFIC DRAWINGS WITH DETAILED VAULT DIMENSIONS AND WEIGHTS, PLEASE CONTACT YOUR CONTECH ENGINEERED SOLUTIONS LLC REPRESENTATIVE. www.ContechES.com
4. STORMFILTER WATER QUALITY STRUCTURE SHALL BE IN ACCORDANCE WITH ALL DESIGN DATA AND INFORMATION CONTAINED IN THIS DRAWING.
5. STRUCTURE SHALL MEET AASHTO HS-20 LOAD RATING, ASSUMING EARTH COVER OF 0' - 5' AND GROUNDWATER ELEVATION AT, OR BELOW, THE OUTLET PIPE INVERT ELEVATION. ENGINEER OF RECORD TO CONFIRM ACTUAL GROUNDWATER ELEVATION. CASTINGS SHALL MEET AASHTO M306 AND BE CAST WITH THE CONTECH LOGO.
6. FILTER CARTRIDGES SHALL BE MEDIA-FILLED, PASSIVE, SIPHON ACTUATED, RADIAL FLOW, AND SELF CLEANING. RADIAL MEDIA DEPTH SHALL BE 7-INCHES. FILTER MEDIA CONTACT TIME SHALL BE AT LEAST 38 SECONDS.
7. SPECIFIC FLOW RATE IS EQUAL TO THE FILTER TREATMENT CAPACITY (gpm) DIVIDED BY THE FILTER CONTACT SURFACE AREA (sq ft).
8. STORMFILTER STRUCTURE SHALL BE PRECAST CONCRETE CONFORMING TO ASTM C-478 AND AASHTO LOAD FACTOR DESIGN METHOD.

INSTALLATION NOTES
A. ANY SUB-BASE, BACKFILL DEPTH, AND/OR ANTI-FLOTATION PROVISIONS ARE SITE-SPECIFIC DESIGN CONSIDERATIONS AND SHALL BE SPECIFIED BY ENGINEER OF RECORD.
B. CONTRACTOR TO PROVIDE EQUIPMENT WITH SUFFICIENT LIFTING AND REACH CAPACITY TO LIFT AND SET THE STORMFILTER STRUCTURE (LIFTING CLUTCHES PROVIDED).
C. CONTRACTOR TO INSTALL JOINT SEALANT BETWEEN ALL STRUCTURE SECTIONS AND ASSEMBLE STRUCTURE.
D. CONTRACTOR TO PROVIDE, INSTALL, AND GROUT INLET PIPE(S).
E. CONTRACTOR TO PROVIDE AND INSTALL CONNECTOR TO THE OUTLET RISER STUB. STORMFILTER EQUIPPED WITH A DUAL DIAMETER HDPE OUTLET STUB AND SAND COLLAR. IF OUTLET PIPE IS LARGER THAN 8 INCHES, CONTRACTOR TO REMOVE THE 8 INCH OUTLET STUB AT MOLDED IN CUT LINE. COUPLING BY FERNCO OR EQUAL AND PROVIDED BY CONTRACTOR.
F. CONTRACTOR TO TAKE APPROPRIATE MEASURES TO PROTECT CARTRIDGES FROM CONSTRUCTION-RELATED EROSION RUNOFF.

CONTECH ENGINEERED SOLUTIONS LLC
www.contechES.com
9025 Centre Pointe Dr., Suite 400, West Chester, OH 45069
800-338-1122 513-645-7000 513-645-7993 FAX

SFMH60
STORMFILTER
STANDARD DETAIL

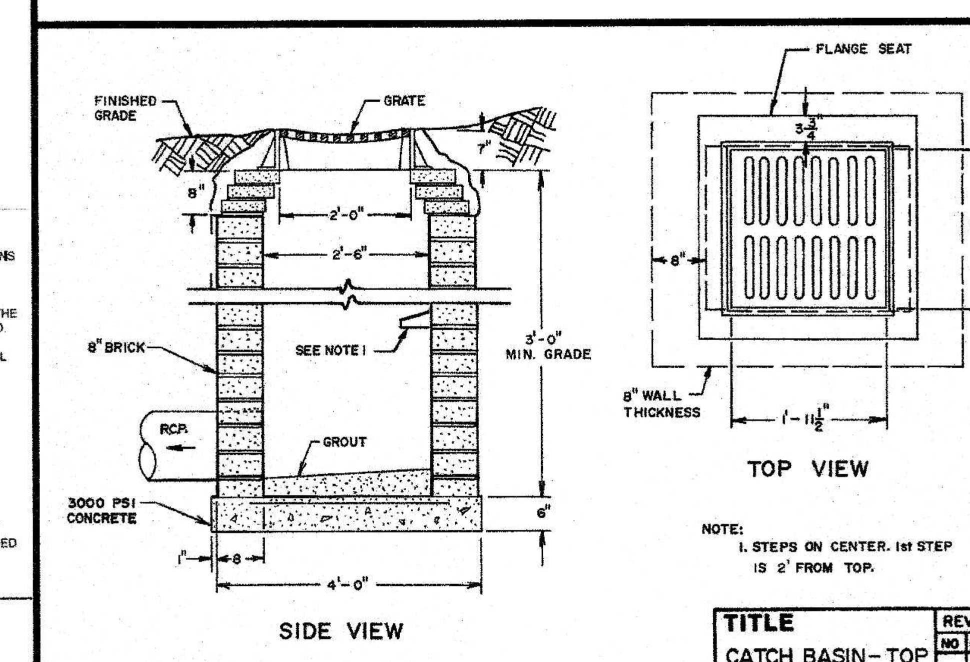

NOTE:
1. STEPS ON CENTER. 1st STEP IS 2' FROM TOP.

NO SCALE

ENGINEERING DEPARTMENT STANDARD DETAILS

TITLE	REVISIONS NO / DATE / BY	DET.NO
CATCH BASIN-TOP VIEW & SIDE VIEW		SD-6

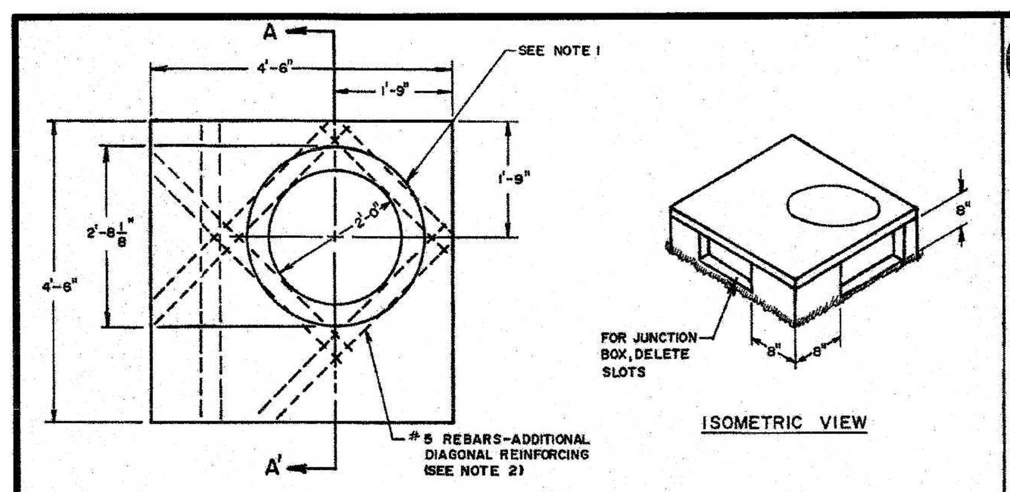

NOTES:
1. SHOWN WITH EAST JORDAN IRON WORKS FLUSH MOUNT MANHOLE FOR USE WITH ALL YARD INLETS & AS AN ALTERNATE FOR JUNCTION BOXES IN SIDEWALKS OR YARD AREAS ONLY. FOR ALL OTHER JUNCTION BOXES USE MANHOLES SPECIFIED IN STD. DET. SD-4C, GROUT AS SHOWN.
2. COVER TO BE 4000 PSI CONCRETE WITH #5 REBAR @ 6" O.C. EACH WAY.
3. SEE STANDARD DETAIL SD-2A FOR SECTION A-A'.

NO SCALE

ENGINEERING DEPARTMENT STANDARD DETAILS

TITLE	REVISIONS NO / DATE / BY	DET.NO.
YARD INLET/ JUNCTION BOX		SD-2

SH 1 of 2

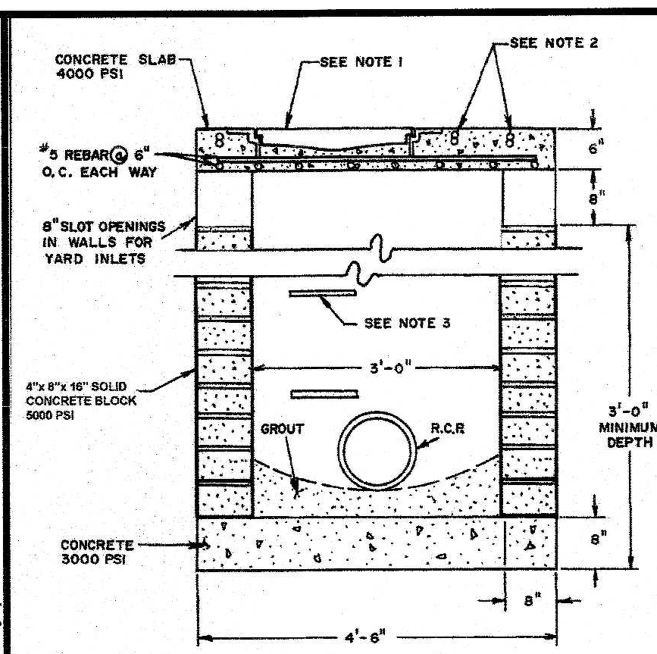

NOTES:
1. EAST JORDAN IRON WORKS FLUSH MOUNT MANHOLE & MH RING. SEE STD. DETAIL SD-4C.
2. #5 REBAR PLACED DIAGONALLY AROUND MANHOLE RING. SEE STD. DET. SD-2.
3. MANHOLE STEPS @ 15" O.C. 1st STEP IS 2'-0" FROM TOP.
4. THIS DETAIL MAY BE USED AS AN ALTERNATE FOR JUNCTION BOXES IN SIDEWALK OR YARD AREAS ONLY.

SECTION A-A'

NO SCALE

ENGINEERING DEPARTMENT STANDARD DETAILS

TITLE	REVISIONS NO / DATE / BY	DET.NO.
YARD INLET-		SD-2A

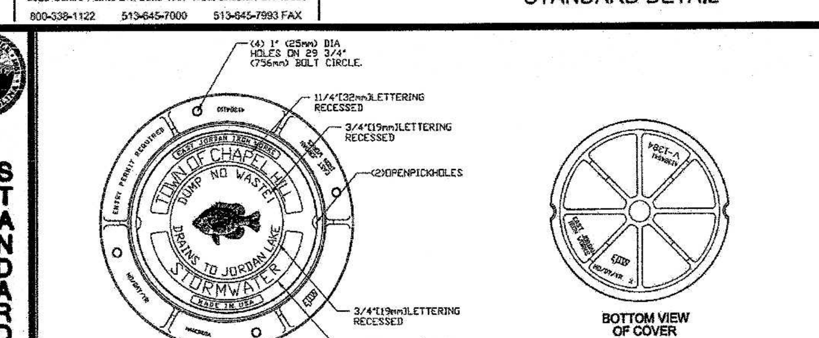

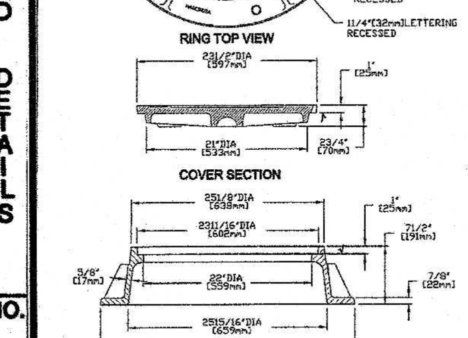

TYPE 2 RING & COVER

EAST JORDAN IRON WORKS V1384-1 RING WITH V1384 COVER OR APPROVED EQUAL. MINIMUM WEIGHTS: RING 190 LBS., COVER 120 LBS.

1. TYPE 2 RING & COVER TO BE USED IN STREETS.
2. MATERIAL TO BE GREY IRON CONFORMING TO ASTM A48 CLASS 35 AND SHALL BE UNCOATED.
3. COVER TO MEET PROOF LOAD REQUIREMENTS OF AASHTO M306-89. (40,000 LB. PROOF LOAD)
4. FISH LOGO AND ALL LETTERING TO BE CLEAN, CRISP, AND CLEARLY LEGIBLE.
5. CASTING MUST BE MANUFACTURED IN THE UNITED STATES. MANUFACTURER MUST BE APPROVED BY THE TOWN OF CHAPEL HILL.

√ MACHINED SURFACE

ENGINEERING DEPARTMENT STANDARD DETAILS

TITLE	REVISIONS	DET. NO.
MANHOLE RING & COVER - TYPE 2		SD-4B

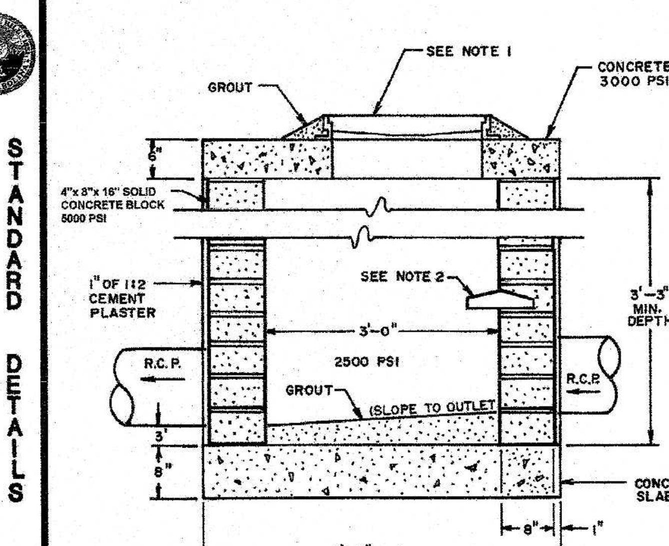

NOTES:
1. USE EAST JORDAN IRON WORKS MANHOLE RING & SOLID COVER IN SIDEWALKS & YARD AREAS. USE MANHOLE RING & SOLID COVER IN STREETS.
2. MANHOLE STEPS @ 15" O.C., 1st STEP IS 2' FROM TOP.

NO SCALE

ENGINEERING DEPARTMENT STANDARD DETAILS

TITLE	REVISIONS NO / DATE / BY	DET.NO.
JUNCTION BOX DETAIL		SD-3

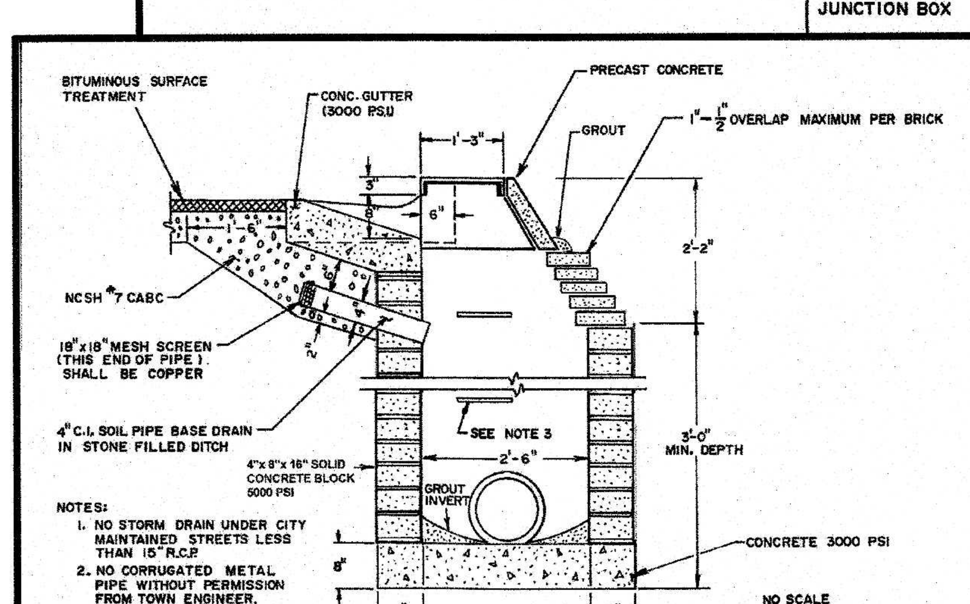

NOTES:
1. NO STORM DRAIN UNDER CITY MAINTAINED STREETS LESS THAN 15" R.C.P.
2. NO CORRUGATED METAL PIPE WITHOUT PERMISSION FROM TOWN ENGINEER.
3. 1st STEP IS 2' FROM TOP.

NO SCALE

ENGINEERING DEPARTMENT STANDARD DETAILS

TITLE	REVISIONS NO / DATE / BY	DET.NO.
CURB INLET- SIDE VIEW		SD-5

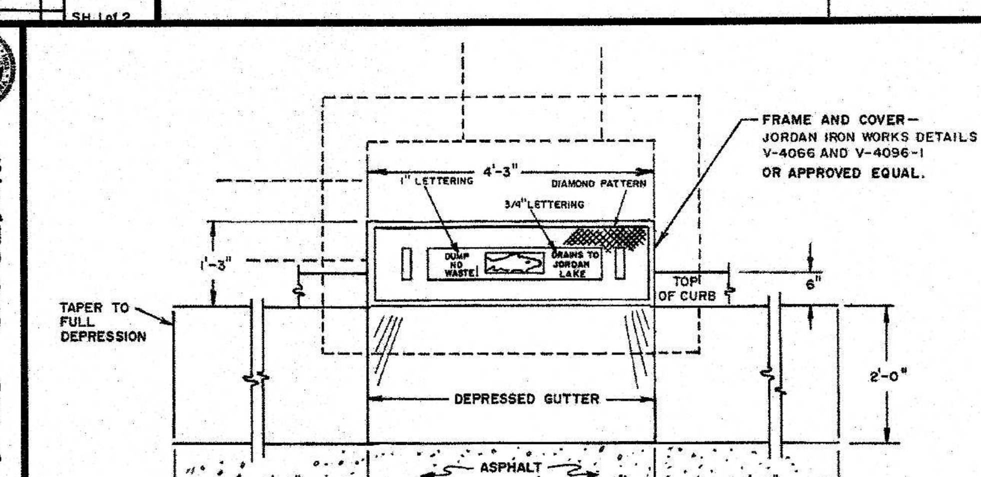

NOTES: ALL STORMDRAIN INLET HOODS AND COVERS INSTALLED OR REPLACED WITHIN THE CHAPEL HILL PLANNING JURISDICTION AFTER JULY 31, 2000 SHALL BE PRE-CAST WITH THE MESSAGE: "DUMP NO WASTE ! DRAINS TO JORDAN LAKE" (INCLUDING THE CAST IMAGE OF A FISH).
PRE-CAST HOODS AND COVERS SHALL BE DESIGNED IN ACCORDANCE WITH EAST JORDAN IRON WORKS DETAILS V-4066 AND V-4096-1, OR EQUAL, AND MUST COMPLY WITH APPLICABLE STATE AND TOWN REQUIREMENTS FOR MATERIALS AND INSTALLATION.
THIS DETAIL SUPERCEDES STORM DRAIN (SD-5C) DETAIL AS OF JULY 31, 2000.

NO SCALE

ENGINEERING DEPARTMENT STANDARD DETAILS

TITLE	REVISIONS NO / DATE / BY	DET.NO.
CURB INLET- TOP VIEW		SD-5A

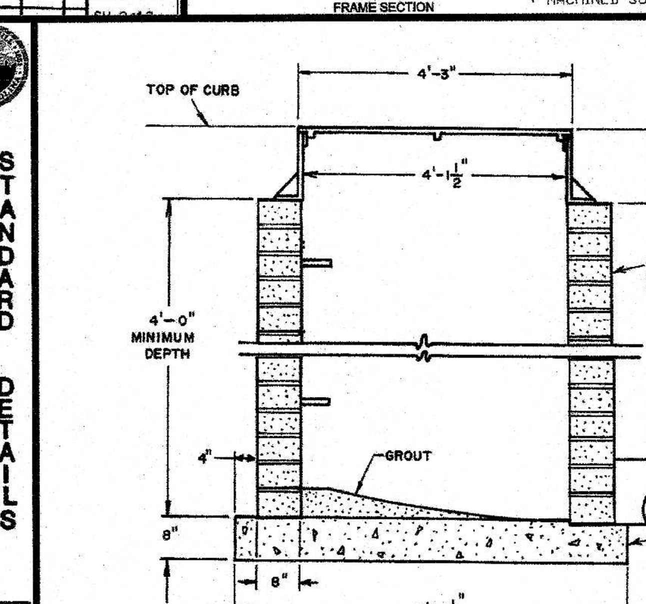

NO SCALE

ENGINEERING DEPARTMENT STANDARD DETAILS

TITLE	REVISIONS NO / DATE / BY	DET.NO.
CURB INLET- FRONT VIEW		SD-5B

NCDOT STREETS

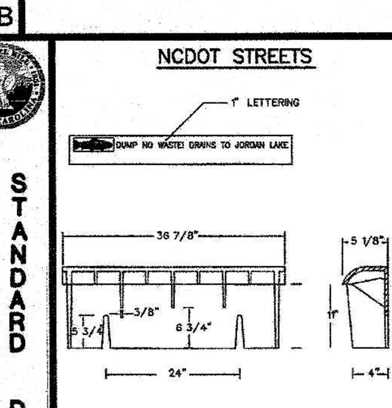

STORMDRAIN CURB INLET HOOD FOR INSTALLATION ON STATE STREETS AND INSTALLATIONS UNDER THE JURISDICTION OF THE NORTH CAROLINA DEPARTMENT OF TRANSPORTATION AND SHALL COMPLY WITH ASTM A48 CL35. IT SHALL BE A HEAVY DUTY TRAFFIC BEARING GRATE WITH AN APPROXIMATE TOTAL WEIGHT OF 575 LBS. (INCLUDES WEIGHT OF GRATE, FRAME & HOOD).

T.O.C.H. STREETS

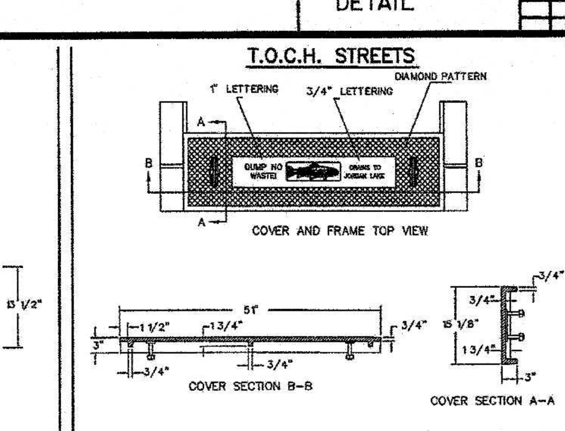

STORMDRAIN CURB INLET COVER FOR INSTALLATION ON TOWN STREETS AND INSTALLATIONS UNDER THE JURISDICTION OF THE TOWN OF CHAPEL HILL SHALL COMPLY WITH ASTM A48 CL35. IT SHALL BE A LIGHT DUTY COVER HAVING AN APPROXIMATE TOTAL WEIGHT OF 307 LBS. (INCLUDES WEIGHT OF COVER AND TWO LEGS).

NOTES:
1. ALL STORMDRAIN INLET HOODS AND COVERS INSTALLED OR REPLACED WITHIN THE CHAPEL HILL PLANNING JURISDICTION AFTER JULY 31, 2000 SHALL BE PRE-CAST WITH THE MESSAGE: "DUMP NO WASTE! DRAINS TO JORDAN LAKE" (INCLUDING THE CAST IMAGE OF A FISH).
2. PRE-CAST HOODS AND COVERS SHALL BE DESIGNED IN ACCORDANCE WITH THE ABOVE MATERIAL SPECIFICATIONS AND MUST COMPLY WITH APPLICABLE STATE AND TOWN REQUIREMENTS FOR MATERIALS AND INSTALLATION.
3. CASTING MUST BE MANUFACTURED IN THE UNITED STATES. MANUFACTURER MUST BE APPROVED BY THE TOWN OF CHAPEL HILL.

N.T.S.

ENGINEERING DEPARTMENT STANDARD DETAILS

TITLE:	REVISIONS	DET.NO.
CURB INLET HOOD AND COVER	6/01 JH, 1/03 JH	SD-5C

PHILIP POST & ASSOCIATES
A Division of Pennoni — Firm License F-1267
PENNONI ASSOCIATES INC.
401 Providence Road #200
Chapel Hill, NC 27514
T 919.929.1173 F 919.493.6548

ALL DIMENSIONS MUST BE VERIFIED BY CONTRACTOR AND OWNER MUST BE NOTIFIED OF ANY DISCREPANCIES BEFORE PROCEEDING WITH WORK

NOT FOR CONSTRUCTION

NORTH CAROLINA PROFESSIONAL ENGINEER SEAL 030517 TIMOTHY A. SMITH 4-10-17

HILLSTONE CHAPEL HILL
1730 FORDHAM BLVD.
CHAPEL HILL, NORTH CAROLINA 27514

DRAINAGE DETAILS

LEON CAPITAL GROUP
5970 FAIRVIEW ROAD, SUITE 450
CHARLOTTE, NORTH CAROLINA 28210

DATE	NO.	REVISIONS	BY
4/7/2017	2	TOWN COMMENT REVISIONS REVIEW #2	WRA
2/20/2017	1	REVISIONS PER TOWN'S REVIEW COMMENTS	WRA

ALL DOCUMENTS PREPARED BY PENNONI ASSOCIATES ARE INSTRUMENTS OF SERVICE IN RESPECT OF THE PROJECT. THEY ARE NOT INTENDED OR REPRESENTED TO BE SUITABLE FOR REUSE BY OWNER OR OTHERS ON THE EXTENSIONS OF THE PROJECT OR ON ANY OTHER PROJECT. ANY REUSE WITHOUT WRITTEN VERIFICATION OR ADAPTATION BY PENNONI ASSOCIATES FOR THE SPECIFIC PURPOSE INTENDED WILL BE AT OWNERS SOLE RISK AND WITHOUT LIABILITY OR LEGAL EXPOSURE TO PENNONI ASSOCIATES; AND OWNER SHALL INDEMNIFY AND HOLD HARMLESS PENNONI ASSOCIATES FROM ALL CLAIMS, DAMAGES, LOSSES AND EXPENSES ARISING OUT OF OR RESULTING THEREFROM.

PROJECT	LCGR1602
DATE	DECEMBER 7, 2016
DRAWING SCALE	1" = 30'
DRAWN BY	WRA
APPROVED BY	TAS

CS6021

P:\Projects\LCGRCOM\LCGR1602-Apartment Site\DESIGN_PUBLISH\CS6021.dwg PLOTTED: 4/10/2017 12:51 PM, BY: Donald Chitty PLOTSTYLE: Pennoni NCS.stb PROJECT STATUS: DESIGN DEVELOPMENT

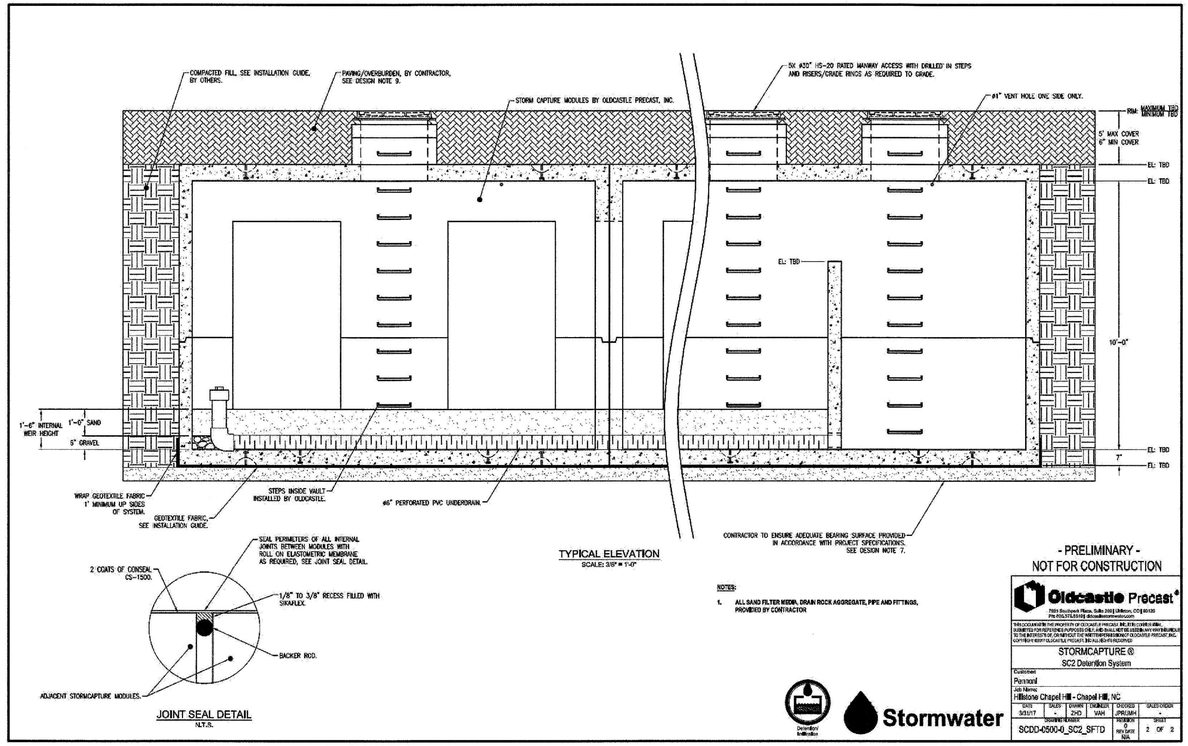

REVISIONS			
REVISION	DATE	REV BY	DESCRIPTION OF REVISION
0	N/A	N/A	

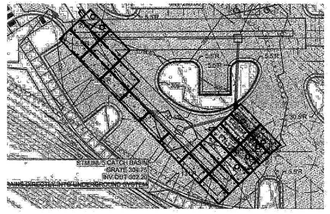

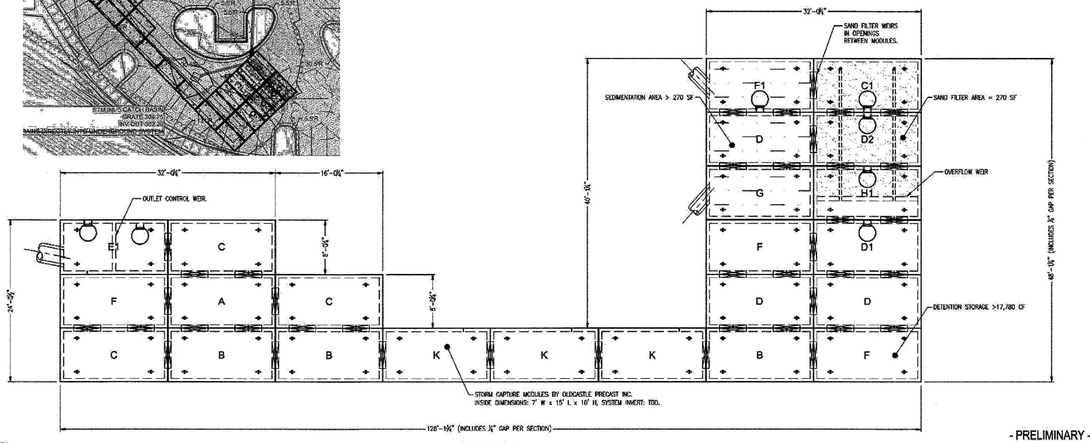

PLAN VIEW
SCALE: 3/32" = 1'-0"

East System

DESIGN NOTES:
1. DESIGN LOADINGS:
   A. AASHTO HS-20-44 W/ IMPACT.
   B. DEPTH OF COVER = 6" - 5'-0" (120 PCF ASSUMED).
   C. ASSUMED WATER TABLE = BELOW BOTTOM OF PRECAST.
   D. DRY LATERAL EARTH PRESSURE (EFP) = 65 PCF.
   E. LATERAL LIVE LOAD SURCHARGE = 60 PSF (APPLIED TO 8' BELOW GRADE).
   F. NO LATERAL SURCHARGE FROM ADJACENT BUILDINGS, WALL PIERS, OR FOUNDATIONS.
2. CONCRETE 28 DAY COMPRESSIVE STRENGTH SHALL BE 6,000 PSI.
3. STEEL REINFORCEMENT: REBAR, ASTM A-615 OR A-706, GRADE 60.
4. CEMENT: ASTM C-150 SPECIFICATION.
5. STORM CAPTURE MODULE TYPE = DETENTION.
6. REQUIRED BASE LAYER DEPTH = NOT APPLICABLE.
7. REQUIRED NATIVE ALLOWABLE SOIL BEARING PRESSURE = 2,500 PSF.
8. REFERENCE STANDARDS:
   A. ASTM C 890
   B. ASTM C 891
   C. ASTM C 913
9. ANY DESIGN CONSTRAINT DIFFERENT FROM ABOVE REQUIRES CUSTOM STRUCTURAL DESIGN AND MAY REQUIRE THICKER SUBGRADE AND REVISED PRICING.

NOTES TO REVIEWING ENGINEER:
1. THIS SYSTEM IS DESIGNED TO THE PARAMETERS NOTED. PLEASE VERIFY THAT THESE PARAMETERS MEET PROJECT REQUIREMENTS (I.E. LIVE LOAD AND FILL RANGE). IF DESIGN PARAMETERS ARE INCORRECT NOTIFY OLDCASTLE IMMEDIATELY FOR REDESIGN AND RE-PRICING.
2. REVIEWING ENGINEER TO CONFIRM ALL PIPE PENETRATION LOCATIONS, SIZES, AND INVERTS.
3. REVIEWING ENGINEER TO CONFIRM ALL MANWAY ACCESS LOCATIONS AND RIM ELEVATIONS.
4. UNLESS OTHERWISE NOTED, ALL PIPE SUPPLIED AND INSTALLED BY OTHERS.
5. THIS SYSTEM IS DESIGNED FOR A GROUNDWATER TABLE BELOW SYSTEM INVERT. REVIEWING ENGINEER TO VERIFY THAT THE DESIGN GROUNDWATER TABLE IS BELOW INVERT OF PRECAST. IF DESIGN PARAMETERS ARE INCORRECT NOTIFY OLDCASTLE IMMEDIATELY FOR REDESIGN AND REVISED PRICING.
6. THIS SYSTEM IS DESIGNED WITHOUT A CONTAINMENT MEMBRANE LINER. IF A LINER IS NEEDED PLEASE CONTACT OLDCASTLE TO PROVIDE THIS OPTION IN THE FINAL DESIGN.

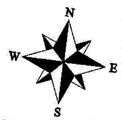

- PRELIMINARY - NOT FOR CONSTRUCTION

Oldcastle Precast
7501 Southpark Plaza, Suite 200 | Littleton, CO | 80120
Ph: 800.579.8815 | oldcastleprecast.com
THIS DOCUMENT IS THE PROPERTY OF OLDCASTLE PRECAST, INC. IT IS CONFIDENTIAL SUBMITTED FOR REFERENCE PURPOSES ONLY, AND SHALL NOT BE ASSIGNED IN WHOLE OR IN PART TO THE INSTITUTION OR PERSON OTHER THAN THE INTENDED RECIPIENT OF OLDCASTLE PRECAST, INC. COPYRIGHT ©2017 OLDCASTLE PRECAST, INC. ALL RIGHTS RESERVED.
STORMCAPTURE®
SC2 Detention System
Customer: Pennoni
Job Name: Hillstone Chapel Hill, Chapel Hill, NC
DATE 3/15/17 | SCALE - | DRAWN MB | ENGINEER VAH | CHECKED VAH | QUOTATION -
DRAWING NUMBER: SCDD-0457-0_SC2_DTSF
REVISION REV DATE N/A
SHEET 1 OF 1
Detention Infiltration
Stormwater

PHILIP POST & ASSOCIATES
A Division of Pennoni Firm License F-1267
PENNONI ASSOCIATES INC.
401 Providence Road #200
Chapel Hill, NC 27514
T 919.929.1173 F 919.493.6548

ALL DIMENSIONS MUST BE VERIFIED BY CONTRACTOR AND OWNER MUST BE NOTIFIED OF ANY DISCREPANCIES BEFORE PROCEEDING WITH WORK

NOT FOR CONSTRUCTION
NORTH CAROLINA PROFESSIONAL ENGINEER SEAL 030611 TIMOTHY A. SIMPSON
4-10-17
FOR BIDDING OR CONSTRUCTION

HILLSTONE CHAPEL HILL
1730 FORDHAM BLVD.
CHAPEL HILL, NORTH CAROLINA 27514
UNDERGROUND DETENTION
EAST DETAILS
LEON CAPITAL GROUP
5970 FAIRVIEW ROAD, SUITE 450
CHARLOTTE, NORTH CAROLINA 28210

NO.	DATE	REVISIONS	BY
2	4/7/2017	TOWN COMMENT REVISIONS REVIEW #2	WRA
1	2/20/2017	REVISIONS PER TOWN'S REVIEW COMMENTS	WRA

ALL DOCUMENTS PREPARED BY PENNONI ASSOCIATES ARE INSTRUMENTS OF SERVICE IN RESPECT OF THE PROJECT. THEY ARE NOT INTENDED OR REPRESENTED TO BE SUITABLE FOR REUSE BY OWNER OR OTHERS ON THE EXTENSIONS OF THE PROJECT OR ON ANY OTHER PROJECT. ANY REUSE WITHOUT WRITTEN VERIFICATION OR ADAPTATION BY PENNONI ASSOCIATES FOR THE SPECIFIC PURPOSE INTENDED WILL BE AT OWNER'S SOLE RISK AND WITHOUT LIABILITY OR LEGAL EXPOSURE TO PENNONI ASSOCIATES; AND OWNER SHALL INDEMNIFY AND HOLD HARMLESS PENNONI ASSOCIATES FROM ALL CLAIMS, DAMAGES, LOSSES AND EXPENSES ARISING OUT OF OR RESULTING THEREFROM.

PROJECT	LCGR1602
DATE	DECEMBER 7, 2016
DRAWING SCALE	1" = 30'
DRAWN BY	WRA
APPROVED BY	TAS

CS6022

SHEET 21 OF 26

P:\Projects\LCGR\CSM\LCGR1602-Apartment Site\DESIGN_PUBLISH\CS6022.dwg PLOTTED: 4/10/2017 12:53 PM, BY: Donald Colby PLOTSTYLE: Pennoni NCS.stb PROJECT STATUS: DESIGN DEVELOPMENT