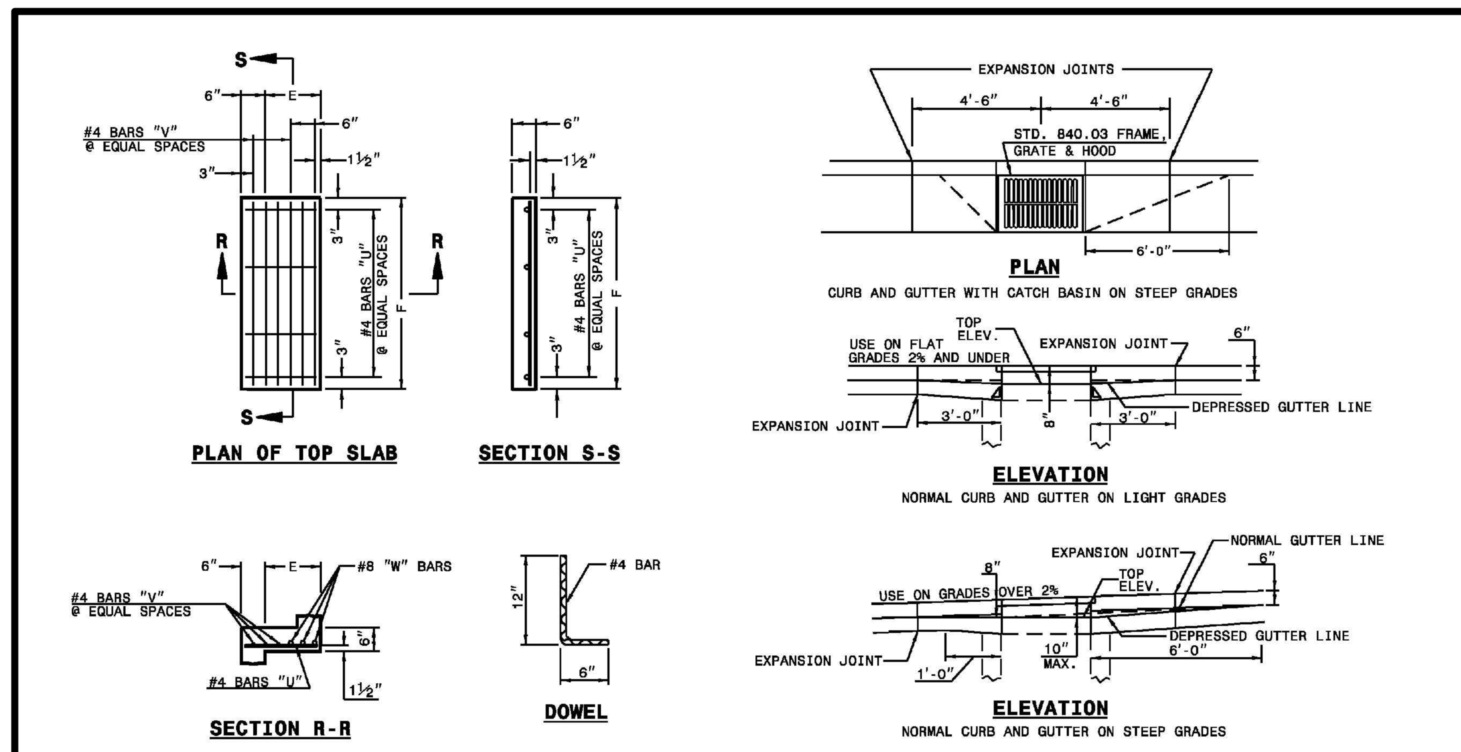

ENGLISH STANDARD DRAWING FOR CONCRETE CATCH BASIN 12" THRU 54" PIPE

STATE OF NORTH CAROLINA DEPT. OF TRANSPORTATION DIVISION OF HIGHWAYS RALEIGH, N.C.

1-12 — SHEET 2 OF 2 — 840.02

MINIMUM DIMENSIONS AND QUANTITIES FOR CONCRETE CATCH BASIN(BASED ON MIN. HEIGHT, H, WITH NO RISER) *

DIMENSIONS OF BOX AND PIPE						COVER DIMENSION		BARS-U		BARS-V		BARS-W		TOTAL LBS.	CU.YDS. CONC. IN BOX			DEDUCTIONS ONE PIPE	
PIPE D	SPAN A	WIDTH B	WIDTH C	SPAN G	MIN. HEIGHT H	E	F	NO.	LENGTH	NO.	LENGTH	NO.	LENGTH		TOP SLAB	BOTTOM SLAB	TOT. CONC. FOR MINIMUM HEIGHT, H	C.M.	R.C.
12"	3'-0"	2'-2"	--	--	2'-9"	--	--	--	--	--	--	--	--	--	--	0.235	0.772	0.015	0.026
15"	3'-0"	2'-2"			3'-0"											0.235	0.829	0.023	0.036
18"	3'-0"	2'-2"			3'-3"											0.235	0.887	0.033	0.049
24"	3'-0"	2'-2"			3'-9"											0.235	1.001	0.059	0.085
30"	3'-0"	2'-2"	3'-4"		4'-3"	1'-2"	4'-0"	4	1'-5"	2	3'-9"	3	3'-9"	39	0.123	0.321	1.433	0.092	0.127
36"	3'-0"	2'-2"	3'-10"		4'-9"	1'-8"	4'-0"	4	1'-11"	3	3'-9"	3	3'-9"	43	0.161	0.358	1.714	0.132	0.178
42"	3'-0"	2'-2"		4'-5"	5'-3"	1'-5"	3'-2"	4	1'-8"	2	2'-11"	3	2'-11"	32	0.112	0.318	1.738	0.180	0.243
48"	3'-0"	2'-2"		5'-0"	5'-9"	2'-0"	3'-2"	4	2'-3"	3	2'-11"	3	2'-11"	35	0.145	0.352	2.052	0.235	0.317
54"	3'-0"	2'-2"		5'-7"	6'-3"	2'-7"	3'-2"	4	2'-10"	5	2'-11"	3	2'-11"	41	0.180	0.386	2.387	0.297	0.401

* RISER HAS .228 CUBIC YARDS OF CONCRETE PER FOOT HEIGHT

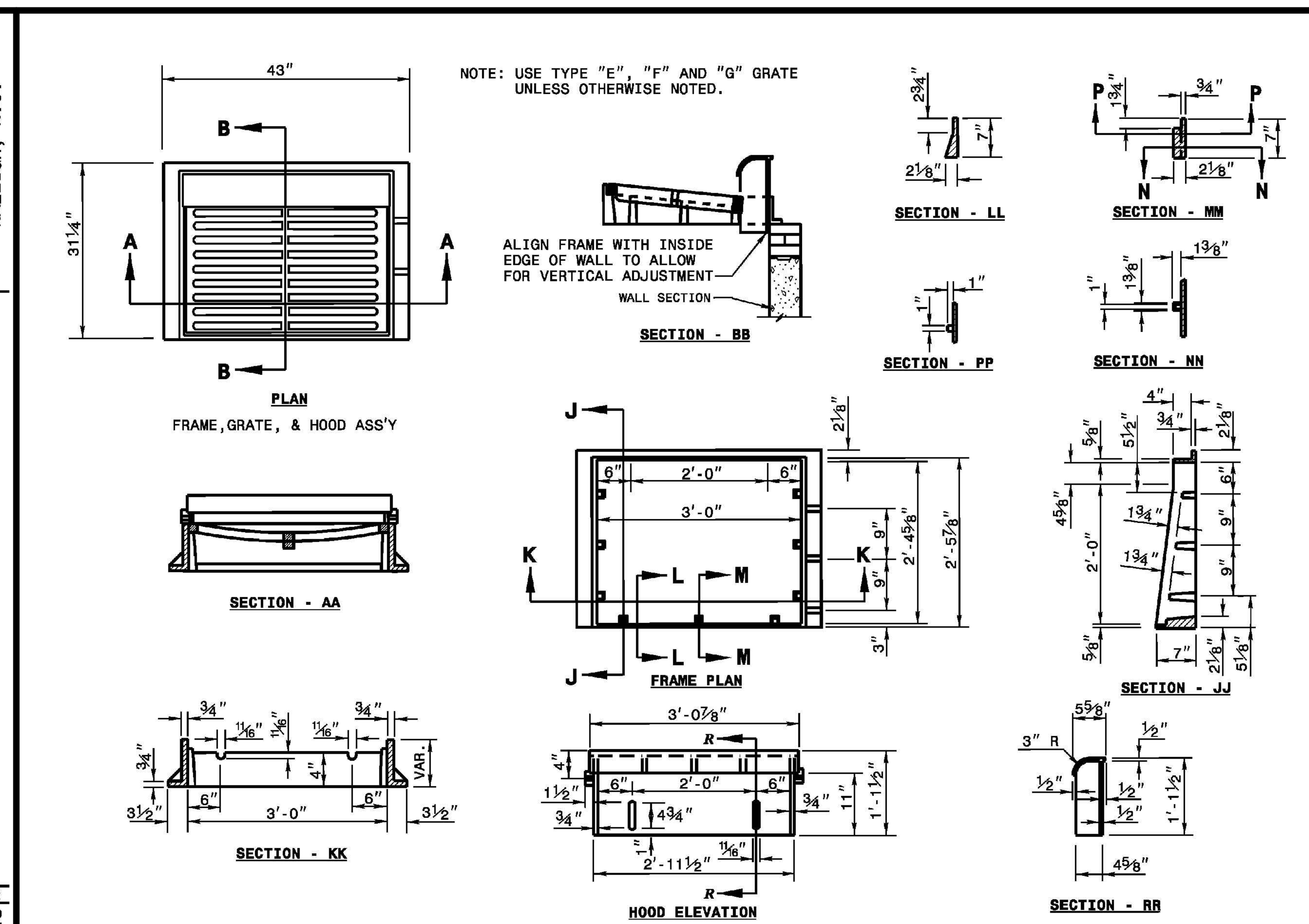

ENGLISH STANDARD DRAWING FOR FRAME, GRATES, AND HOOD FOR USE ON STANDARD CATCH BASIN

STATE OF NORTH CAROLINA DEPT. OF TRANSPORTATION DIVISION OF HIGHWAYS RALEIGH, N.C.

1-12 — SHEET 1 OF 2 — 840.03

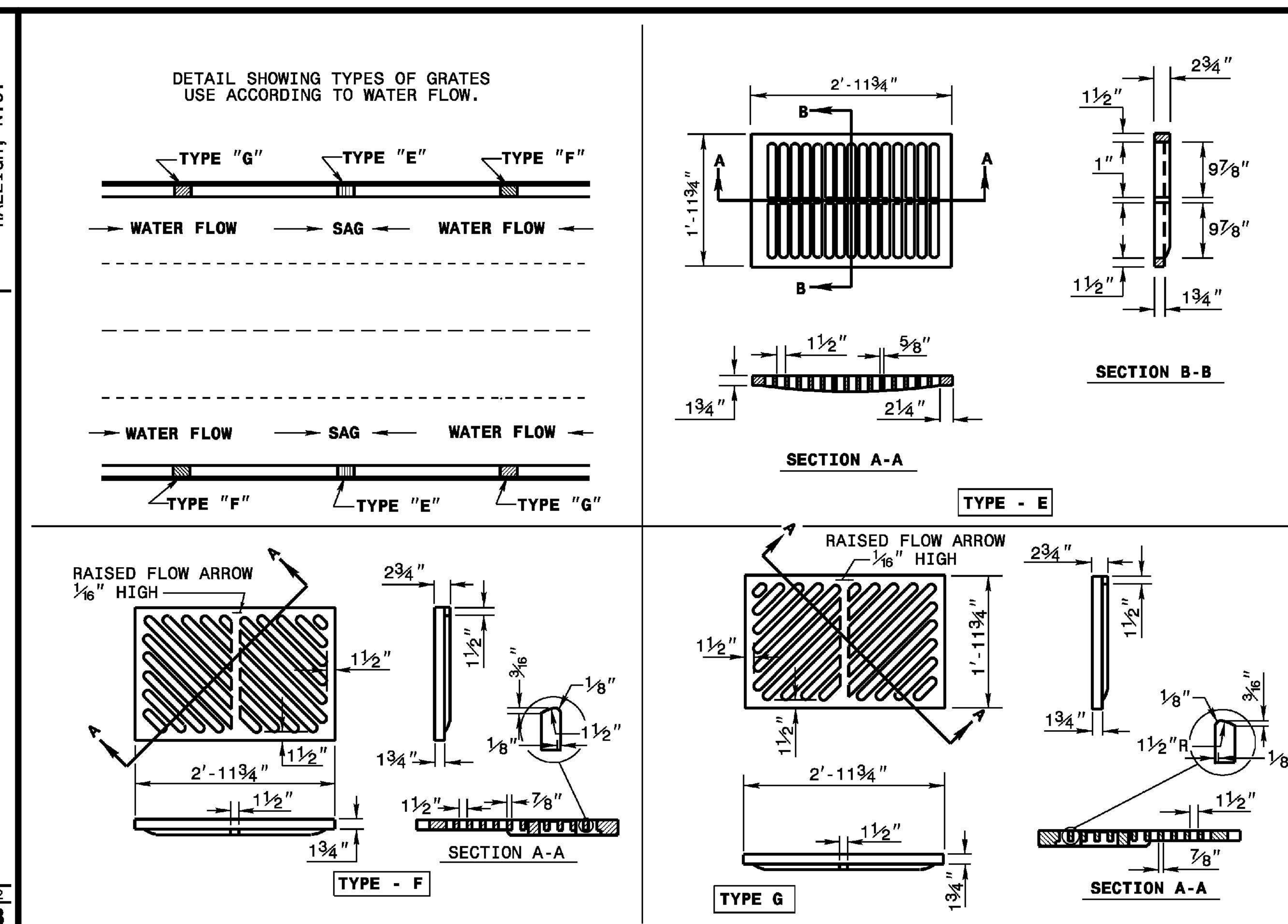

ENGLISH STANDARD DRAWING FOR FRAME, GRATES, AND HOOD FOR USE ON STANDARD CATCH BASIN

STATE OF NORTH CAROLINA DEPT. OF TRANSPORTATION DIVISION OF HIGHWAYS RALEIGH, N.C.

1-12 — SHEET 2 OF 2 — 840.03

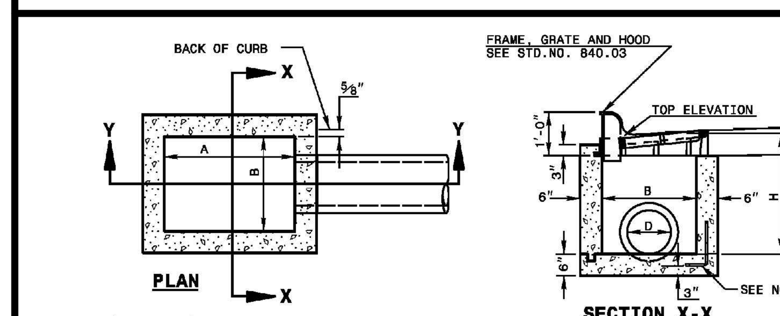

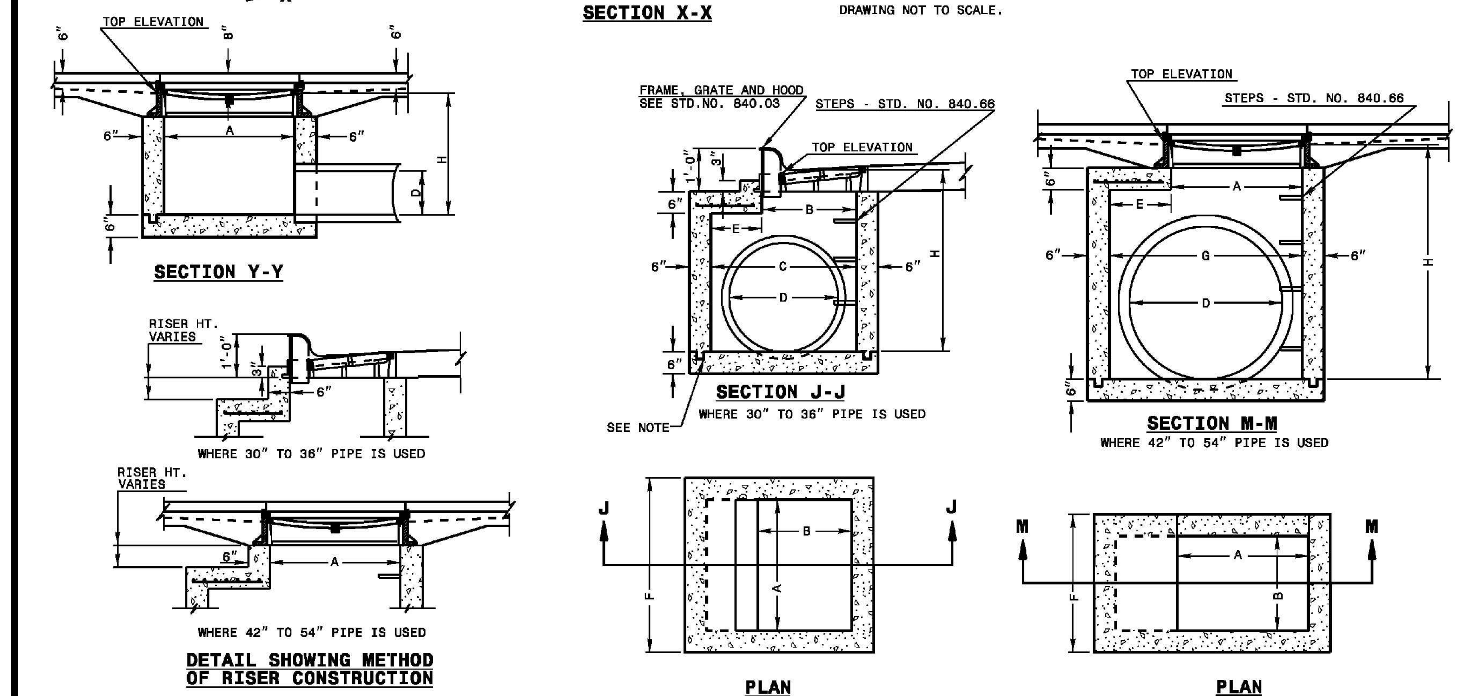

GENERAL NOTES:

USE CLASS "B" CONCRETE THROUGHOUT.

PROVIDE ALL CATCH BASINS OVER 3'-6" IN DEPTH WITH STEPS 12" ON CENTER. USE STEPS WHICH COMPLY WITH STD. DRAWING 840.66.

OPTIONAL CONSTRUCTION - MONOLITHIC POUR, 2" KEYWAY, OR #4 BAR DOWELS AT 12" CENTERS AS DIRECTED BY THE ENGINEER.

USE FORMS FOR THE CONSTRUCTION OF THE BOTTOM SLAB.

IF REINFORCED CONCRETE PIPE IS SET IN BOTTOM SLAB OF BOX, ADD TO SLAB AS SHOWN ON STD. NO. 840.00.

USE TYPE "E", "F" AND "G" GRATES UNLESS OTHERWISE INDICATED.

FOR 8'-0" IN HEIGHT OR LESS USE 6" WALLS AND BOTTOM SLAB. OVER 8'-0" TO 16'-0" IN HEIGHT USE 8" WALLS AND BOTTOM SLAB. ADJUST QUANTITIES ACCORDINGLY.

CONSTRUCT WITH PIPE CROWNS MATCHING.

CHAMFER ALL EXPOSED CORNERS 1".

DRAWING NOT TO SCALE.

ENGLISH STANDARD DRAWING FOR CONCRETE CATCH BASIN 12" THRU 54" PIPE

STATE OF NORTH CAROLINA DEPT. OF TRANSPORTATION DIVISION OF HIGHWAYS RALEIGH, N.C.

1-12 — SHEET 1 OF 2 — 840.02

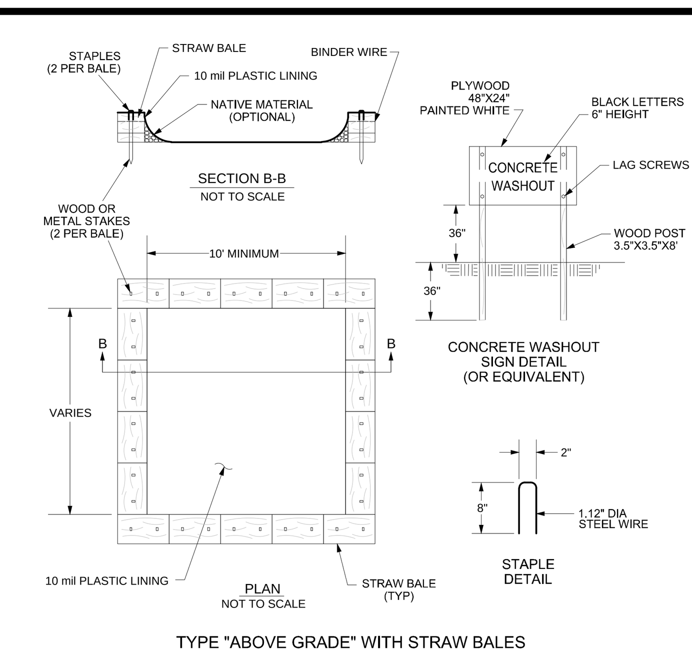

TYPE "ABOVE GRADE" WITH STRAW BALES

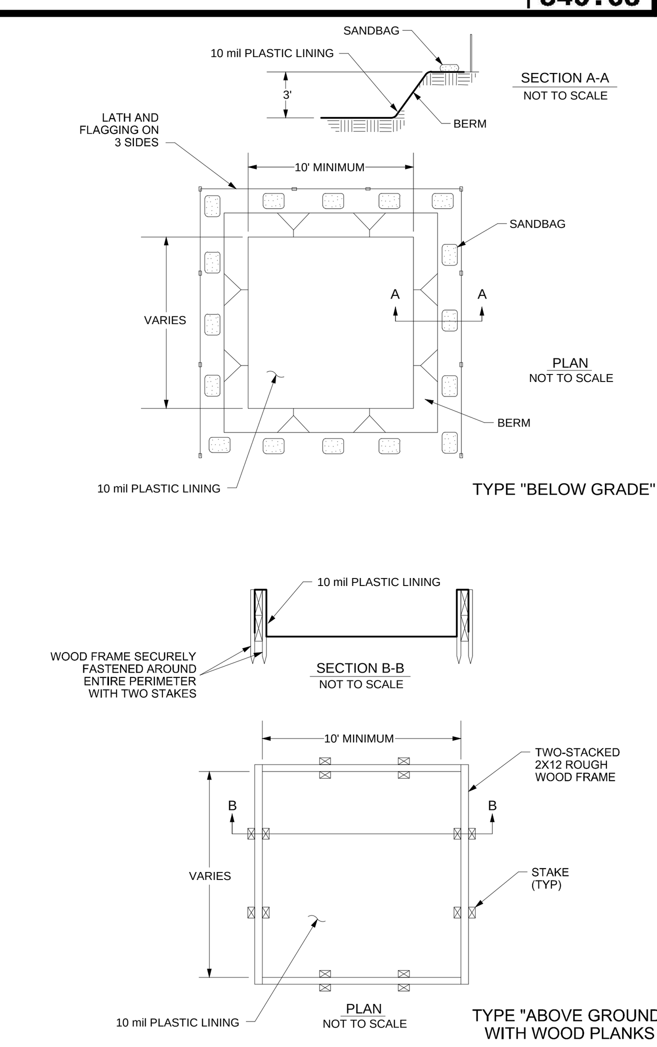

TYPE "BELOW GRADE"

TYPE "ABOVE GROUND" WITH WOOD PLANKS

NOTES

1. ACTUAL LAYOUT TO BE DETERMINED IN THE FIELD.
2. A CONCRETE WASHOUT SIGN SHALL BE INSTALLED WITHIN 30' OF THE TEMPORARY CONCRETE WASHOUT FACILITY.
3. MATERIALS USED TO CONSTRUCT TEMPORARY CONCRETE WASHOUT FACILITIES SHALL BE REMOVED FROM THE SITE OF THE WORK AND DISPOSED OF OR RECYCLED.
4. HOLES, DEPRESSIONS OR OTHER GROUND DISTURBANCE CAUSED BY THE REMOVAL OF THE TEMPORARY CONCRETE WASHOUT FACILITIES SHALL BE BACKFILLED, REPAIRED, AND STABILIZED TO PREVENT EROSION.

CONCRETE WASHOUT DETAIL

N.T.S.

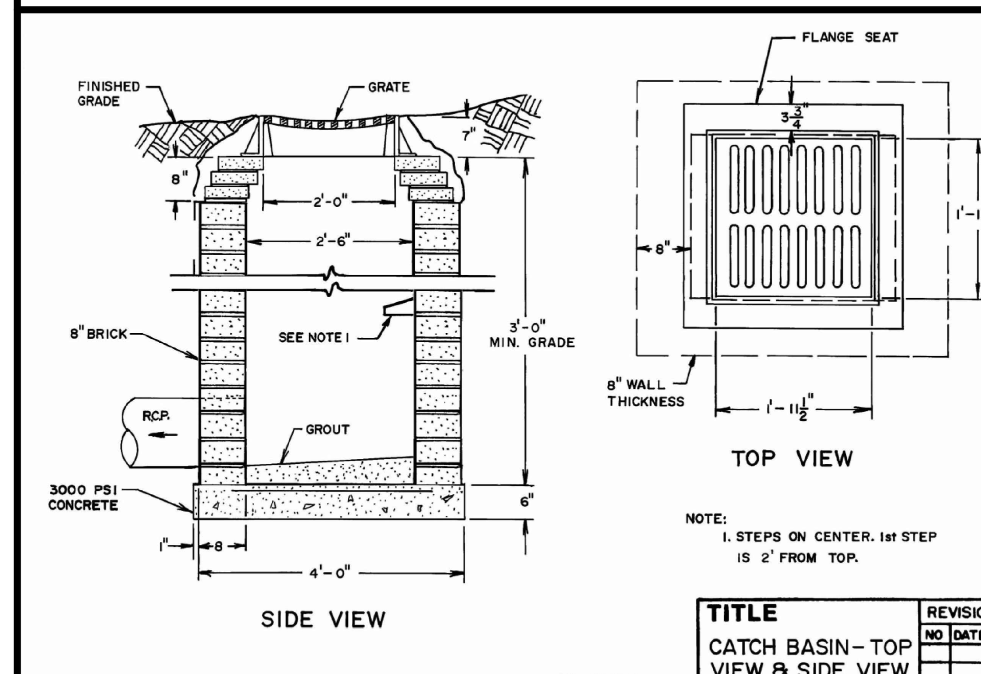

TITLE: CATCH BASIN-TOP VIEW & SIDE VIEW — ENGINEERING DEPARTMENT STANDARD DETAILS — DET.NO SD-6

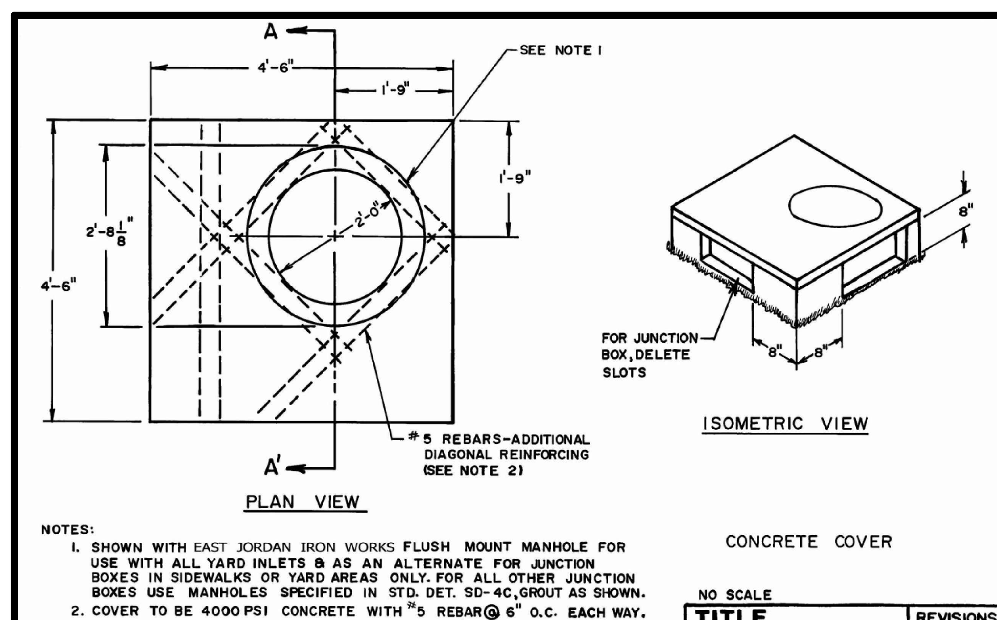

TITLE: YARD INLET/JUNCTION BOX — ENGINEERING DEPARTMENT STANDARD DETAILS — DET.NO. SD-2

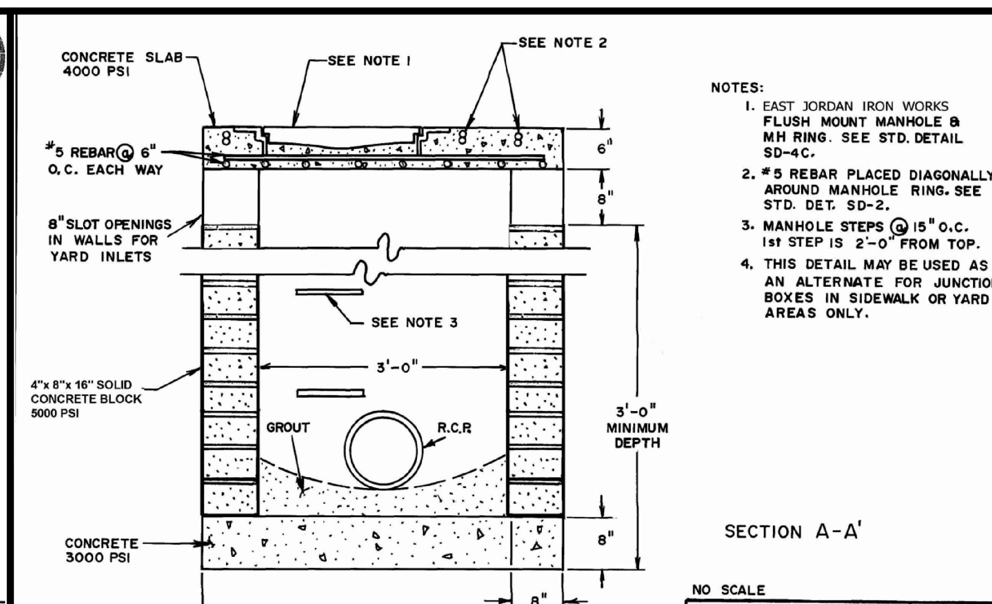

TITLE: YARD INLET- — ENGINEERING DEPARTMENT STANDARD DETAILS — DET.NO. SD-2A

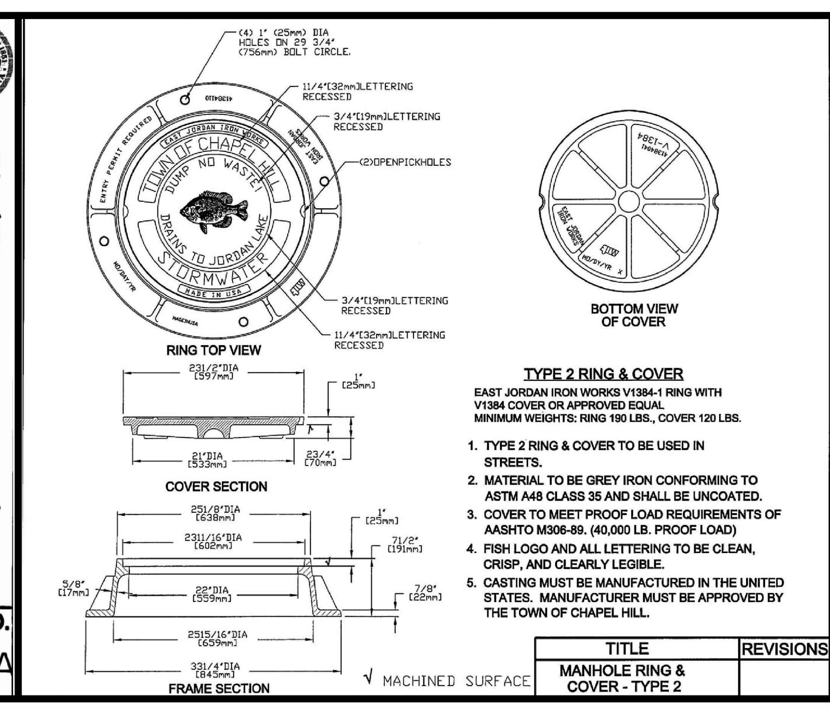

TITLE: MANHOLE RING & COVER - TYPE 2 — ENGINEERING DEPARTMENT STANDARD DETAILS — DET. NO. SD-4B

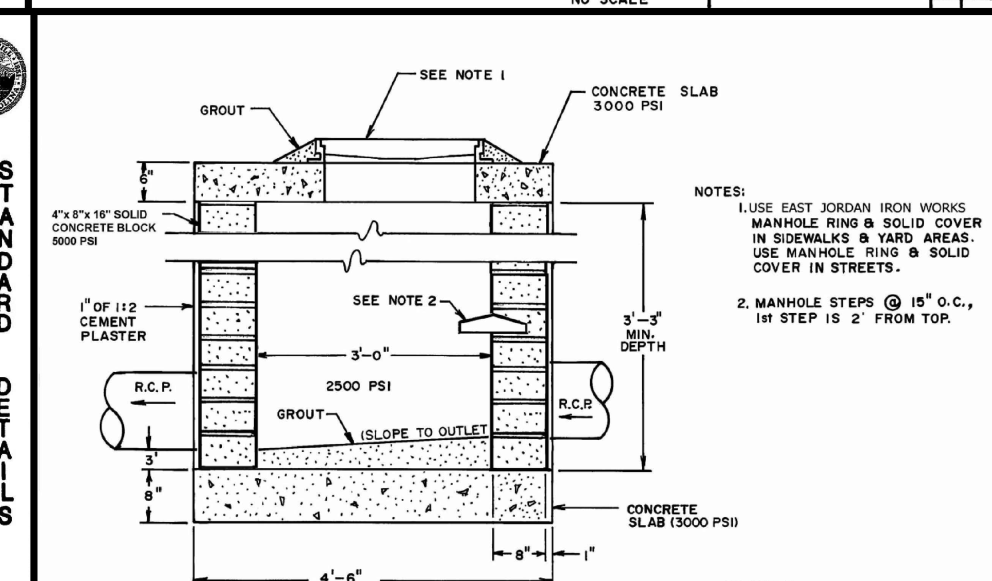

TITLE: JUNCTION BOX DETAIL — ENGINEERING DEPARTMENT STANDARD DETAILS — DET.NO. SD-3

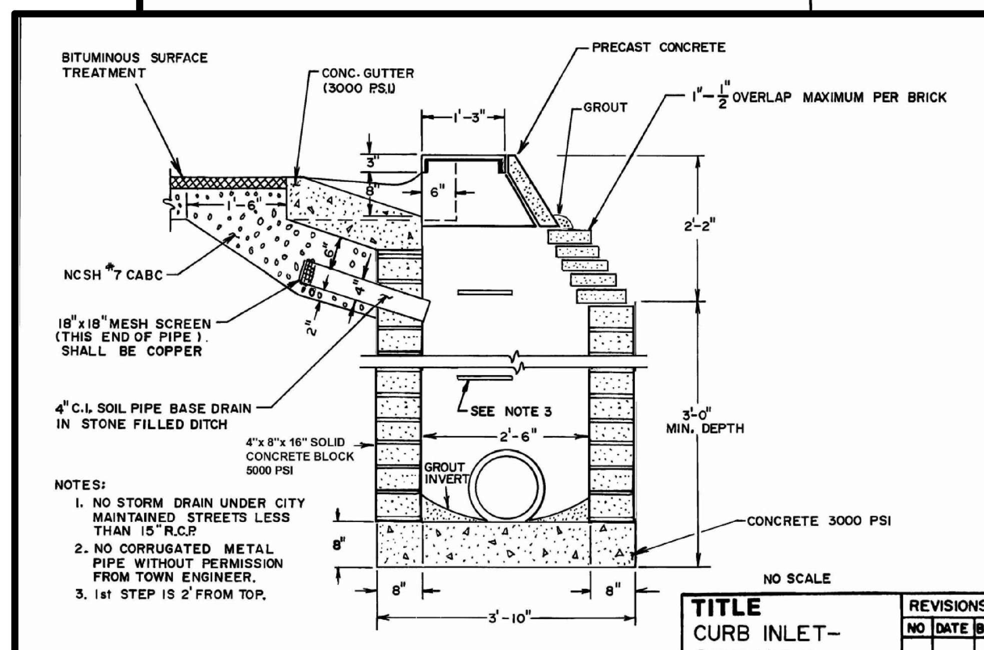

TITLE: CURB INLET-SIDE VIEW — ENGINEERING DEPARTMENT STANDARD DETAILS — DET.NO. SD-5

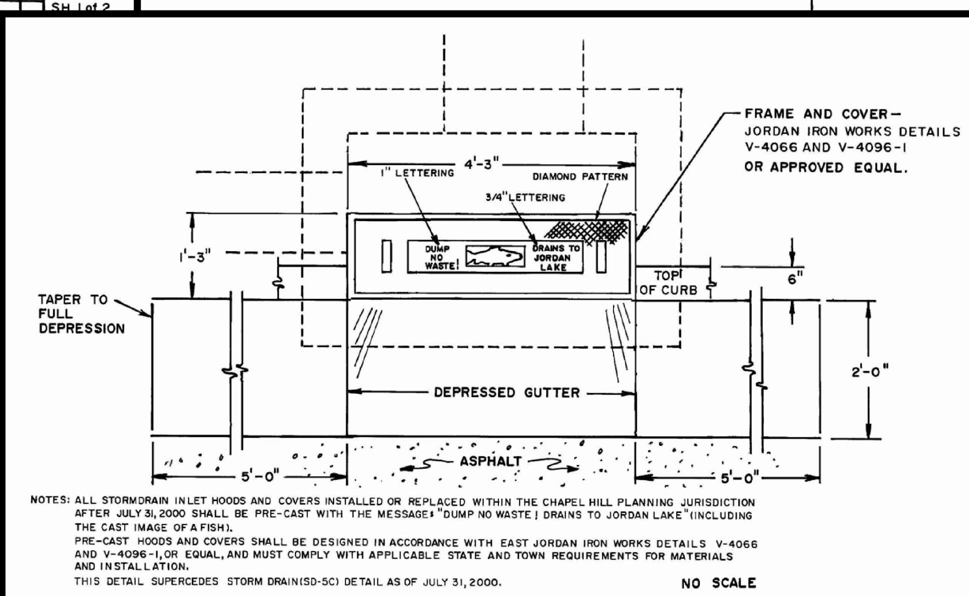

TITLE: CURB INLET-TOP VIEW — ENGINEERING DEPARTMENT STANDARD DETAILS — DET.NO. SD-5A

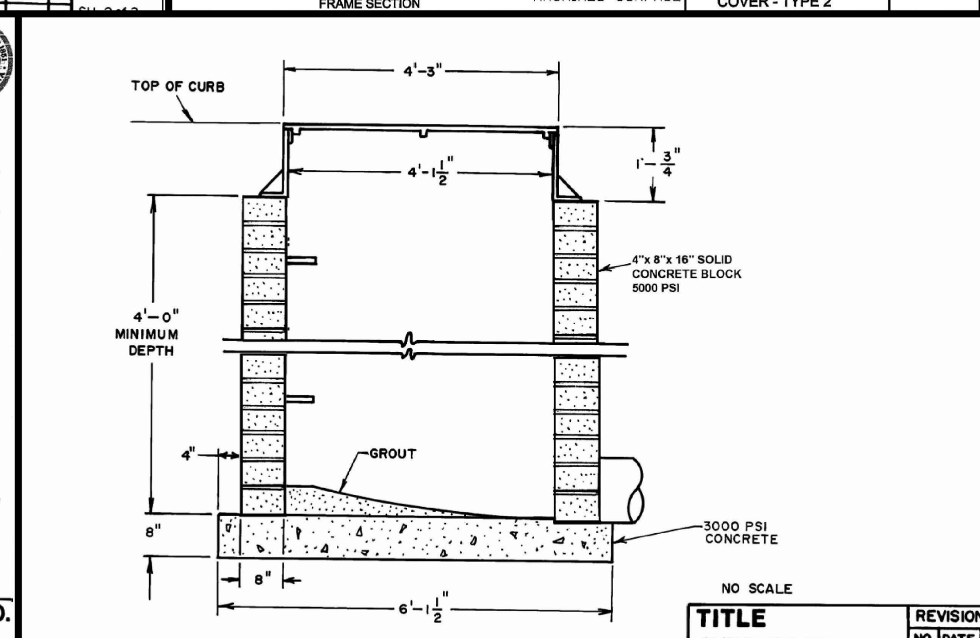

TITLE: CURB INLET-FRONT VIEW — ENGINEERING DEPARTMENT STANDARD DETAILS — DET.NO. SD-5B

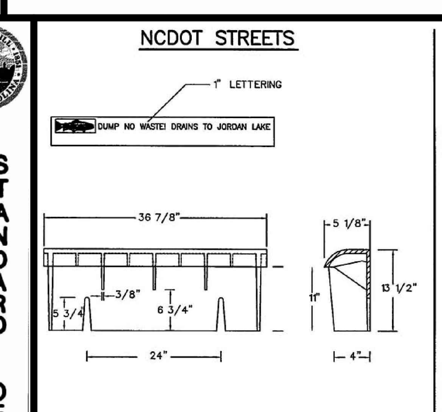

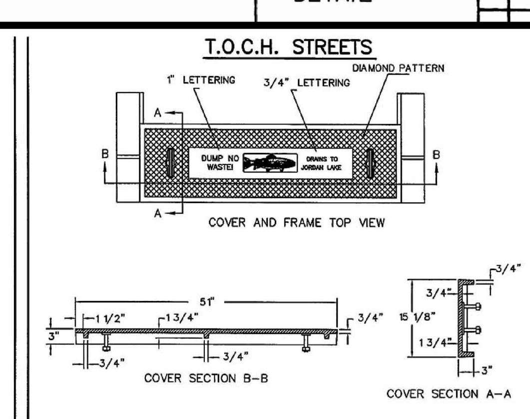

TITLE: CURB INLET HOOD AND COVER — ENGINEERING DEPARTMENT STANDARD DETAILS — DET.NO. SD-5C

PHILIP POST & ASSOCIATES
A Division of Pennoni — Firm License F-1267
PENNONI ASSOCIATES INC.
401 Providence Road #200
Chapel Hill, NC 27514
T 919.929.1173 F 919.493.6548

ALL DIMENSIONS MUST BE VERIFIED BY CONTRACTOR AND OWNER MUST BE NOTIFIED OF ANY DISCREPANCIES BEFORE PROCEEDING WITH WORK

NOT FOR CONSTRUCTION

HILLSTONE CHAPEL HILL

1730 FORDHAM BLVD.
CHAPEL HILL, NORTH CAROLINA 27514

DRAINAGE DETAILS

LEON CAPITAL GROUP
5970 FAIRVIEW ROAD, SUITE 450
CHARLOTTE, NORTH CAROLINA 28210

DATE	NO.	REVISIONS	BY
7/31/2017	4	TOWN COMMENT REVISIONS REVIEW #4	DMC
6/15/2017	3	TOWN COMMENT REVISIONS REVIEW #3	WRA
4/7/2017	2	TOWN COMMENT REVISIONS REVIEW #2	WRA
2/20/2017	1	REVISIONS PER TOWN'S REVIEW COMMENTS	WRA

ALL DOCUMENTS PREPARED BY PENNONI ASSOCIATES ARE INSTRUMENTS OF SERVICE IN RESPECT OF THE PROJECT. THEY ARE NOT INTENDED OR REPRESENTED TO BE SUITABLE FOR REUSE BY OWNER OR OTHERS ON THE EXTENSIONS OF THE PROJECT OR ON ANY OTHER PROJECT. ANY REUSE WITHOUT WRITTEN VERIFICATION OR ADAPTATION BY PENNONI ASSOCIATES FOR THE SPECIFIC PURPOSE INTENDED WILL BE AT OWNERS SOLE RISK AND WITHOUT LIABILITY OR LEGAL EXPOSURE TO PENNONI ASSOCIATES; AND OWNER SHALL INDEMNIFY AND HOLD HARMLESS PENNONI ASSOCIATES FROM ALL CLAIMS, DAMAGES, LOSSES AND EXPENSES ARISING OUT OF OR RESULTING THEREFROM.

PROJECT	LCGR1602
DATE	DECEMBER 7, 2016
DRAWING SCALE	1" = 30'
DRAWN BY	WRA
APPROVED BY	TAS

CS6021

SHEET 22 OF 28

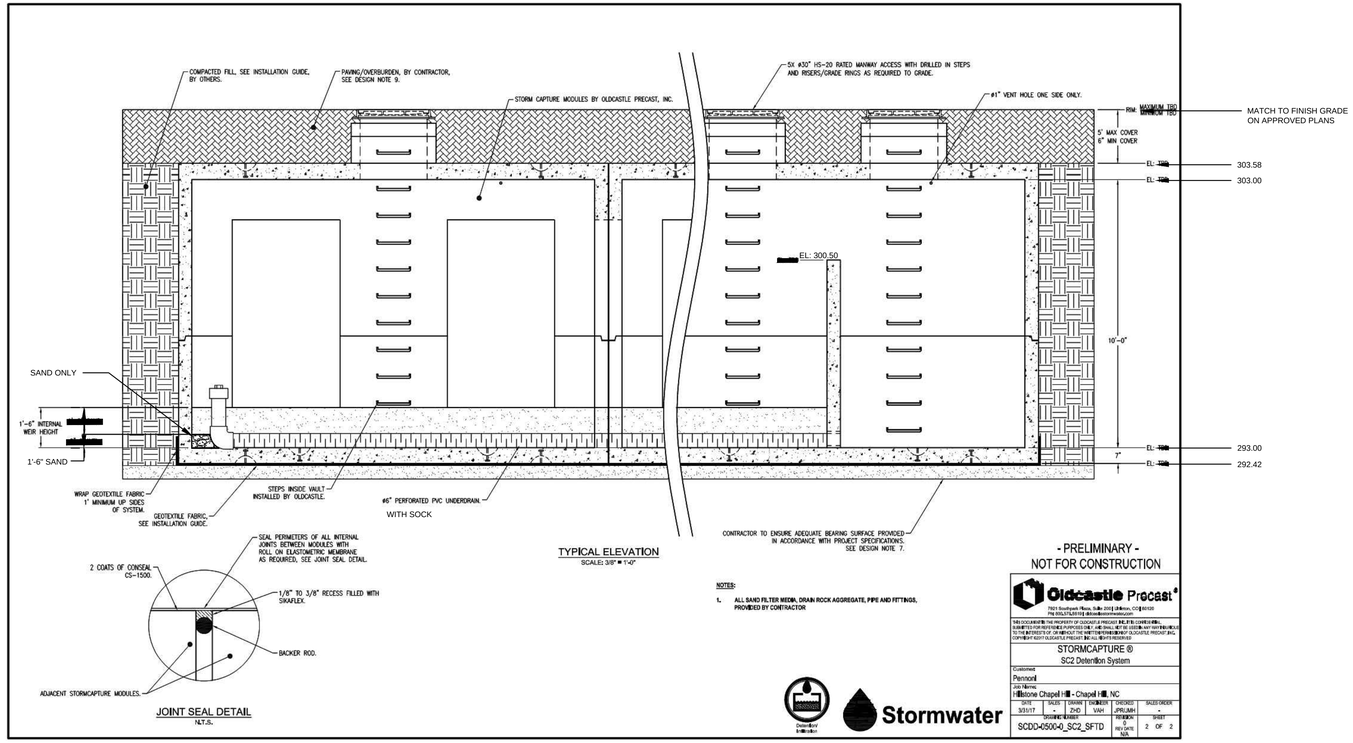

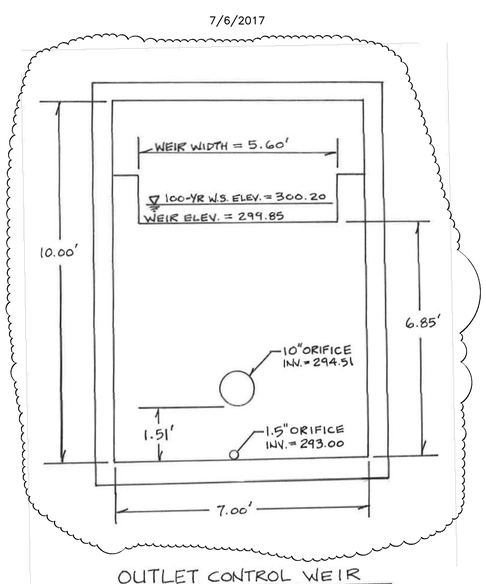

REVISIONS			
REVISION	DATE	REV BY	DESCRIPTION OF REVISION
0	N/A	N/A	

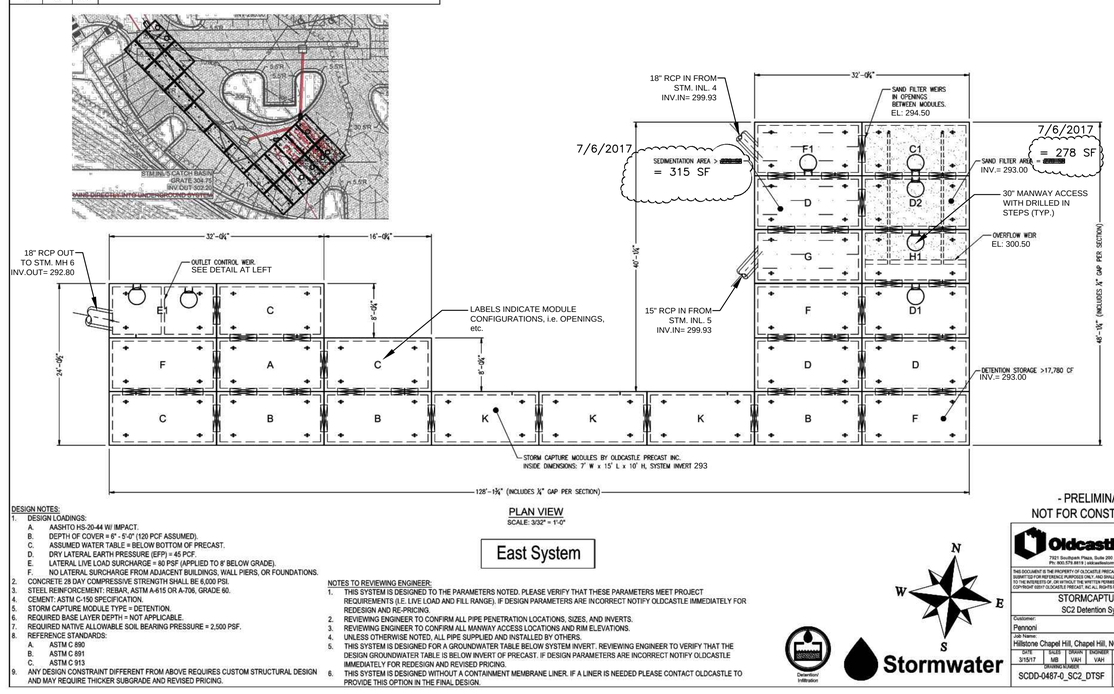

DESIGN NOTES:
1. DESIGN LOADINGS:
   A. AASHTO HS-20-44 W/ IMPACT.
   B. DEPTH OF COVER = 6" - 5'-0" (120 PCF ASSUMED).
   C. ASSUMED WATER TABLE = BELOW BOTTOM OF PRECAST.
   D. DRY LATERAL EARTH PRESSURE (EFP) = 45 PCF.
   E. LATERAL LIVE LOAD SURCHARGE = 80 PSF (APPLIED TO 8' BELOW GRADE).
   F. NO LATERAL SURCHARGE FROM ADJACENT BUILDINGS, WALL PIERS, OR FOUNDATIONS.
2. CONCRETE: 28 DAY COMPRESSIVE STRENGTH SHALL BE 6,000 PSI.
3. STEEL REINFORCEMENT: REBAR, ASTM A-615 OR A-706, GRADE 60.
4. CEMENT: ASTM C-150 SPECIFICATION.
5. STORM CAPTURE MODULE TYPE = DETENTION.
6. REQUIRED BASE LAYER DEPTH = NOT APPLICABLE.
7. REQUIRED NATIVE ALLOWABLE SOIL BEARING PRESSURE = 2,500 PSF.
8. REFERENCE STANDARDS:
   A. ASTM C 890
   B. ASTM C 891
   C. ASTM C 913
9. ANY DESIGN CONSTRAINT DIFFERENT FROM ABOVE REQUIRES CUSTOM STRUCTURAL DESIGN AND MAY REQUIRE THICKER SUBGRADE AND REVISED PRICING.

NOTES TO REVIEWING ENGINEER:
1. THIS SYSTEM IS DESIGNED TO THE PARAMETERS NOTED. PLEASE VERIFY THAT THESE PARAMETERS MEET PROJECT REQUIREMENTS (I.E. LIVE LOAD AND FILL RANGE). IF DESIGN PARAMETERS ARE INCORRECT NOTIFY OLDCASTLE IMMEDIATELY FOR REDESIGN AND RE-PRICING.
2. REVIEWING ENGINEER TO CONFIRM ALL PIPE PENETRATION LOCATIONS, SIZES, AND INVERTS.
3. REVIEWING ENGINEER TO CONFIRM ALL MANWAY ACCESS LOCATIONS AND RIM ELEVATIONS.
4. UNLESS OTHERWISE NOTED, ALL PIPE SUPPLIED AND INSTALLED BY OTHERS.
5. THIS SYSTEM IS DESIGNED FOR A GROUNDWATER TABLE BELOW SYSTEM INVERT. REVIEWING ENGINEER TO VERIFY THAT THE DESIGN GROUNDWATER TABLE IS BELOW INVERT OF PRECAST. IF DESIGN PARAMETERS ARE INCORRECT NOTIFY OLDCASTLE IMMEDIATELY FOR REDESIGN AND REVISED PRICING.
6. THIS SYSTEM IS DESIGNED WITHOUT A CONTAINMENT MEMBRANE LINER. IF A LINER IS NEEDED PLEASE CONTACT OLDCASTLE TO PROVIDE THIS OPTION IN THE FINAL DESIGN.

NOTES:

1. THE MEDIA IN THE SAND FILTER SHALL BE CLEANED, WASHED, COARSE MASONRY SAND SUCH AS ASTM C33. THE SAND PARTICLES SHALL BE LESS THAN 2mm AVERAGE.
2. A COPY OF THE PURCHASE RECEIPT FOR THE SAND MATERIAL USED IN FILLING THE SYSTEM SHALL BE PROVIDED WITH THE AS-BUILT SUBMITTALS PRIOR TO THE ISSUANCE OF THE CERTIFICATE OF OCCUPANCY. THE PURCHASE RECEIPT SHALL IDENTIFY THE ASTM SPECIFICATION.
3. PICTURES OF THE WEIR AND ORIFICES IN THE UNDERGROUND DETENTION SYSTEM SHALL BE PROVIDED WITH THE AS-BUILT SUBMITTALS.

PHILIP POST & ASSOCIATES
A Division of Pennoni Firm License F-1267
PENNONI ASSOCIATES INC.
401 Providence Road #200
Chapel Hill, NC 27514
T 919.929.1173 F 919.493.6548

ALL DIMENSIONS MUST BE VERIFIED BY CONTRACTOR AND OWNER MUST BE NOTIFIED OF ANY DISCREPANCIES BEFORE PROCEEDING WITH WORK

NOT FOR CONSTRUCTION
TIMOTHY A. GARDELLA
NORTH CAROLINA PROFESSIONAL ENGINEER SEAL 030517
ENGINEER SEAL

HILLSTONE CHAPEL HILL
1730 FORDHAM BLVD.
CHAPEL HILL, NORTH CAROLINA 27514
UNDERGROUND DETENTION
EAST DETAILS
LEON CAPITAL GROUP
5970 FAIRVIEW ROAD, SUITE 450
CHARLOTTE, NORTH CAROLINA 28210

DATE	NO.	REVISIONS	BY
7/31/2017	4	TOWN COMMENT REVISIONS REVIEW #4	WRA
6/15/2017	3	TOWN COMMENT REVISIONS REVIEW #3	WRA
4/7/2017	2	TOWN COMMENT REVISIONS REVIEW #2	
2/20/2017	1	REVISIONS PER TOWN'S REVIEW COMMENTS	WRA

ALL DOCUMENTS PREPARED BY PENNONI ASSOCIATES ARE INSTRUMENTS OF SERVICE IN RESPECT OF THE PROJECT. THEY ARE NOT INTENDED OR REPRESENTED TO BE SUITABLE FOR REUSE BY OWNER OR OTHERS ON THE EXTENSIONS OF THE PROJECT OR ON ANY OTHER PROJECT. ANY REUSE WITHOUT WRITTEN VERIFICATION OR ADAPTATION BY PENNONI ASSOCIATES FOR THE SPECIFIC PURPOSE INTENDED WILL BE AT OWNERS SOLE RISK AND WITHOUT LIABILITY OR LEGAL EXPOSURE TO PENNONI ASSOCIATES; AND OWNER SHALL INDEMNIFY AND HOLD HARMLESS PENNONI ASSOCIATES FROM ALL CLAIMS, DAMAGES, LOSSES AND EXPENSES ARISING OUT OF OR RESULTING THEREFROM.

PROJECT	LCGR1602
DATE	DECEMBER 7, 2016
DRAWING SCALE	1" = 30'
DRAWN BY	WRA
APPROVED BY	TAS

CS6022

P:\Projects\LCGROUN\LCGR1602-Auspiment Site\DESIGN_PUBLISH\CS6022.dwg PLOTTED: 8/16/2017 4:42 PM, BY: Donald Crotty PLOTSTYLE: Pennoni NCS.stb PROJECT STATUS: DESIGN DEVELOPMENT

GENERAL NOTES:

THE STORM CAPTURE™ SYSTEM BY OLDCASTLE PRECAST IS PART OF THE STORMWATER MANAGEMENT SYSTEM FOR THE RESPECTIVE SITE, AS PREPARED BY THE PROJECT DESIGN ENGINEER. IT IS THE RESPONSIBILITY OF THE DESIGN ENGINEER TO DETERMINE DESIGN FLOW RATES, PRE-TREATMENT AND POST-TREATMENT REQUIREMENTS, STORAGE VOLUME, AND ENSURE THE FINAL DESIGN MEETS ALL CONVEYANCE AND STORAGE REQUIREMENTS. SYSTEM DESIGN AND TYPE, SOIL ANALYSIS, LOADING REQUIREMENTS, COVER HEIGHT AND MODULE SIZE DETERMINE THE FOUNDATION TYPE AND REQUIREMENTS AS STATED HEREIN. ANY VARIATIONS FOUND DURING CONSTRUCTION FROM THE SITE AND SYSTEM ANALYSIS MUST BE REPORTED TO THE PROJECT DESIGN ENGINEER. THE PROJECT DESIGN ENGINEER IS RESPONSIBLE FOR OBTAINING A GEOTECHNICAL ENGINEERING REPORT VERIFYING THE BEARING CAPACITY STATED IN DESIGN NOTES.

DESIGN NOTES:

1. DESIGN LOADINGS:
   A. AASHTO HS-20-44 W/ IMPACT.
   B. DEPTH OF COVER = 6" - 5'-0".
   C. ASSUMED WATER TABLE = BELOW BOTTOM.
   D. EQUIVALENT FLUID PRESSURE = 45 PCF.
   E. LATERAL LIVE LOAD SURCHARGE = 80 PSF.
2. CONCRETE 28 DAY COMPRESSIVE STRENGTH SHALL BE 6,000 PSI.
3. STEEL REINFORCEMENT: REBAR, ASTM A-615, GRADE 60.
4. CEMENT: ASTM C-150 SPECIFICATION.
5. STORM CAPTURE MODULE TYPE = DETENTION.
6. REQUIRED BASE LAYER DEPTH = 2" SAND BEDDING LAYER.
7. REQUIRED NATIVE ALLOWABLE SOIL BEARING PRESSURE = 2,500 PSF.
8. REFERENCE STANDARDS:
   A. ASTM C 890
   B. ASTM C 913
9. LESS THAN 6" OR GREATER THAN 5' OF COVER REQUIRES CUSTOM STRUCTURAL DESIGN AND MAY REQUIRE THICKER SUBGRADE.

INSTALLATION NOTES:

THE STORM CAPTURE™ MODULE SYSTEM IS TO BE INSTALLED IN ACCORDANCE WITH ASTM C891-90, INSTALLATION OF UNDERGROUND PRECAST UTILITY STRUCTURES. PROJECT PLAN AND SPECIFICATIONS MUST BE FOLLOWED ALONG WITH ANY APPLICABLE REGULATIONS.

1. PLAN LINE, GRADE AND ELEVATIONS MUST BE FOLLOWED.
2. WHERE SPECIFIED, AN 8 OZ. NON-WOVEN GEOTEXTILE MUST BE USED AS A SEPARATION LAYER AROUND THE STORM CAPTURE SYSTEM.
3. SUBGRADE MATERIALS, IF SPECIFIED, SHOULD BE CLEAN, DURABLE CRUSHED AGGREGATE COMPACTED AS DIRECTED BY THE ENGINEER. OLDCASTLE RECOMMENDS SIZE 5, 56, OR 57 (PER ASTM C33).
4. DESIGNATED EMBEDDED LIFTERS MUST BE USED. USE PROPER RIGGING TO ASSURE ALL LIFTERS ARE EQUALLY ENGAGED WITH A MINIMUM 60 DEGREE ANGLE ON SLINGS AS NOTED AND IN ACCORDANCE WITH OLDCASTLE LIFTING PROCEDURES.
5. MODULES MUST BE PLACED AS CLOSE TOGETHER AS POSSIBLE, AND GAPS SHALL NOT BE GREATER THAN 3/4". ALL EXTERIOR SYSTEM JOINTS SHALL BE COVERED WITH A MIN. 8" JOINT WRAP ON SIDES AND TOP (CS-212 CONSEAL OR EQUIVALENT). IN A CLAMSHELL DESIGN INSTALL ONE ROW CS-102 CONSEAL (OR EQUIVALENT) BETWEEN PRECAST PIECES.
6. AUTHORIZATION SHOULD BE GIVEN BY THE PROJECT ENGINEER OR DESIGNATED PERSON PRIOR TO PLACEMENT ON BACKFILL FOR THE SYSTEM. CARE SHOULD BE TAKEN DURING PLACEMENT OF BACKFILL NOT TO DISPLACE MODULES OR JOINT WRAP. BACKFILL SHALL BE COMPACTED TO 95% STANDARD PROCTOR DENSITY OR AS SPECIFIED, AND SHOULD NOT BE COMPACTED WITHIN 6" OF MODULE.
7. CONSTRUCTION EQUIPMENT EXCEEDING DESIGN LOADING SHALL NOT BE ALLOWED ON STRUCTURE.
8. TERMADUCTS TO BE KNOCKED OUT AT SPECIFIED LOCATIONS IN FIELD BY OTHERS. SEE SITE LAYOUT FOR LOCATIONS.
9. REINFORCEMENT BEAMS REQUIRED FOR ALL LINK SLABS THAT BORDER PERIMETER MODULES (SEE PLAN DRAWING).

INLETS AND RISERS:

ALL PIPE INLETS SHALL EXTEND INSIDE MODULE A MINIMUM OF 4". PLACE A NON-SHRINK, NON-METALIC GROUT, MIN. 3,000 PSI IN ANNULAR SPACE TO ELIMINATE ALL VOIDS.

STORM CAPTURE MAINTENANCE:

STORM CAPTURE MODULE - SYSTEM INSPECTION AND MAINTENANCE
THE STORM CAPTURE SYSTEM EXCELS WHERE MOST OTHER SYSTEMS FAIL, INCORPORATING FEATURES PROVIDING FOR MAXIMUM SYSTEM PERFORMANCE AND LIFE CYCLE. THE STORM CAPTURE SYSTEM IS A MAJOR COMPONENT OF THE STORMWATER MANAGEMENT SYSTEM. DESIGN AND FUNCTION OF THE SYSTEM IS THE RESPONSIBILITY OF THE PROJECT ENGINEER. MAINTENANCE OF THE STORM CAPTURE IS VITAL FOR SATISFACTORY PERFORMANCE AND LIFE CYCLE OF THE STORMWATER MANAGEMENT SYSTEM. PERMIT REQUIREMENTS, LOCAL, STATE AND FEDERAL REGULATIONS, ALONG WITH OLDCASTLE AND ANY INCORPORATED DEVICE MANUFACTURER RECOMMENDATIONS MUST BE FOLLOWED FOR SYSTEM COMPLIANCE. STORM CAPTURE DESIGN PROVIDES MANWAY ACCESS FOR EASE OF INSPECTION AND DEBRIS REMOVAL IF REQUIRED. *FLUSHING, WHICH CAN CAUSE PARTICLE DISPLACEMENT, UNDERMINING, AND INTERNAL DISTURBANCE, IS NOT RECOMMENDED FOR GRAVEL FOUNDATION, OPEN BOTTOM SYSTEMS. FLUSHING IS ACCEPTABLE IN SYSTEMS WITH CONCRETE BASES.* INLET CONTROLS, INTERNAL OR EXTERNAL, ARE RECOMMENDED FOR CONTROLLING, MONITORING, AND MAINTAINING THE STORM CAPTURE SYSTEM.

EXTERNAL INLETS ARE TYPICALLY DEVICES THAT ARE SEPARATE FROM THE STORM CAPTURE MODULES. THESE EXTERNAL DEVICES RECEIVE SITE STORMWATER AND ARE DESIGNED WITH MANWAY ACCESS FOR MAINTENANCE AND TYPICALLY INCLUDE AN INTERNAL SUMP FOR SEDIMENT CAPTURE. EXTERNAL INLETS MAY RECEIVE SINGLE OR MULTIPLE PIPES AND INCORPORATE AN OPEN GRATED TOP WITH AN OUTFALL PIPE TO THE STORM CAPTURE SYSTEM. GRATED INLETS MAY INCORPORATE PROTECTION DEVICES OR BAFFLES TO CAPTURE FLOATABLES OR THE "FIRST FLUSH." SCHEDULED INSPECTIONS AND MAINTENANCE SHOULD INCLUDE THE REMOVAL OF ANY SEDIMENTATION BUILD-UP. DEBRIS OR SEDIMENTATION BUILD-UP SHOULD NOT EXCEED 3" BELOW AN OUTFALL ELEVATION. INTERNAL COMPONENTS CAN BE INCORPORATED FOR PRE-TREATMENT. MANUFACTURER RECOMMENDATIONS SHOULD BE FOLLOWED. SCHEDULED MAINTENANCE AND INSPECTION WILL INCLUDE REMOVAL OF DEBRIS BY MANUAL OR MECHANICAL MEANS.

MAINTENANCE MODULES (MM's) ARE OPTIONAL INTERNAL CONTROL MODULES BASED ON DESIGN PREFERENCE. MM's ARE MODULES WITH ROOF MANWAY ACCESS OPENINGS AND PROVIDE THE PRIMARY MEANS OF ACCESS TO THE STORM CAPTURE SYSTEM FOR SCHEDULED INSPECTION AND MAINTENANCE. IN ADDITION, MM's CAN INCORPORATE WEIRS OR BAFFLES TO ENHANCE REDUCTION OR REMOVAL OF TOTAL SUSPENDED SOLIDS (TSS) FROM THE STORMWATER. PLACEMENT OF INTERNAL COMPONENTS MUST BE PART OF THE SYSTEM ENGINEERING AND DESIGN. GRATED INLETS CAN BE INCORPORATED TO ACCOMMODATE SURFACE STORMWATER FLOWS INTO THE STORM CAPTURE AND MAY INCLUDE AN INLET PROTECTION DEVICE. SCHEDULED INSPECTION AND MANUFACTURER RECOMMENDATIONS FOR MAINTENANCE SHOULD BE FOLLOWED.

CONCRETE SPLASH PADS MAY BE INSTALLED BELOW INLET GRATE OPENINGS AND PIPE INLETS TO PREVENT BASE EROSION. DURING SCHEDULED INSPECTION AND MAINTENANCE ACTIVITIES, THE CONCRETE SPLASH PADS MUST BE INSPECTED FOR PROPER FUNCTION AND ANY SEDIMENT SHOULD BE REMOVED. STANDARD STORM CAPTURE MODULE DESIGN INCORPORATES "WINDOWS" TO ACCOMMODATE INTERNAL STORMWATER CONVEYANCE BETWEEN MODULES. STANDARD PLACEMENT IS 12" ABOVE THE INTERNAL MODULE INVERT. ANY SEDIMENT AND DEBRIS BUILD-UP OVER 6" INSIDE A MODULE SHOULD BE REMOVED BY MANUAL OR MECHANICAL MEANS. *REMOVAL BY VACUUM IS RECOMMENDED. INTERNAL MODULE FLUSHING, WHICH CAN CAUSE PARTICLE DISPLACEMENT, UNDERMINING, OR INTERNAL DISTURBANCE, IS NOT RECOMMENDED.*

OLDCASTLE RECOMMENDS THAT THE STORM CAPTURE SYSTEM BE INSPECTED QUARTERLY, AND FOLLOWING ANY SIGNIFICANT RAIN EVENTS, WITHIN THE FIRST YEAR OF OPERATION. STANDARD OPERATING PROCEDURES SHOULD SPECIFY AN ANNUAL INSPECTION AND MAINTENANCE PLAN AS REQUIRED THEREAFTER OR AS STATED IN THE PERMIT OR AS REQUIRED BY OTHER GOVERNING REGULATIONS. ONLY AUTHORIZED AND TRAINED PERSONNEL SHOULD INSPECT AND ENTER A STORM CAPTURE SYSTEM. IT IS IMPORTANT THAT PERSONNEL BE PROPERLY TRAINED AND EQUIPPED BEFORE ENTERING ANY UNDERGROUND OR CONFINED SPACE STRUCTURE. TRAINING INCLUDES BEING FAMILIAR WITH AND FOLLOWING LOCAL, STATE, AND FEDERAL REGULATIONS GOVERNING THE OPERATION, INSPECTION, AND MAINTENANCE OF UNDERGROUND STRUCTURES, AS WELL AS SPECIFIC STORM CAPTURE INFILTRATION SYSTEM REQUIREMENTS.

- PRELIMINARY -
NOT FOR CONSTRUCTION

Detention/ Infiltration

STORM CAPTURE®

PATENT PENDING

Oldcastle Precast®
7921 SOUTHPARK PLAZA, SUITE 200, LITTLETON, CO
PHONE: 1-888-965-3227 FAX: 303-794-7497

THIS DOCUMENT IS THE PROPERTY OF OLDCASTLE PRECAST, INC. IT IS CONFIDENTIAL, SUBMITTED FOR REFERENCE PURPOSES ONLY, AND SHALL NOT BE USED IN ANY WAY INJURIOUS TO THE INTERESTS OF, OR WITHOUT THE WRITTEN PERMISSION OF OLDCASTLE PRECAST, INC. COPYRIGHT ©2014 OLDCASTLE PRECAST, INC ALL RIGHTS RESERVED

STORM CAPTURE - SAND FILTER [redacted]
MAINTENANCE
[redacted]

CUSTOMER
PENNONI ASSOCIATES INC.

DATE	SALES	DRAWN	ENGINEER	CHECKED	SALES ORDER
5/7/14	MB	ARG	ARG		

DRAWING NUMBER	REVISION / REV DATE	SHEET
SCDD-0087-0_SC2_SF_1		3 OF 3

NOTES:

1. THE MEDIA IN THE SAND FILTER SHALL BE CLEANED, WASHED, COARSE MASONRY SAND SUCH AS ASTM C33. THE SAND PARTICLES SHALL BE LESS THAN 2mm AVERAGE.
2. A COPY OF THE PURCHASE RECEIPT FOR THE SAND MATERIAL USED IN FILLING THE SYSTEM SHALL BE PROVIDED WITH THE AS-BUILT SUBMITTALS PRIOR TO THE ISSUANCE OF THE CERTIFICATE OF OCCUPANCY. THE PURCHASE RECEIPT SHALL IDENTIFY THE ASTM SPECIFICATION.
3. PICTURES OF THE WEIR AND ORIFICES IN THE UNDERGROUND DETENTION SYSTEM SHALL BE PROVIDED WITH THE AS-BUILT SUBMITTALS.

PHILIP POST & ASSOCIATES
A Division of Pennoni
Firm License F-1267
PENNONI ASSOCIATES INC.
401 Providence Road #200
Chapel Hill, NC 27514
T 919.929.1173 F 919.493.6548

ALL DIMENSIONS MUST BE VERIFIED BY CONTRACTOR AND OWNER MUST BE NOTIFIED OF ANY DISCREPANCIES BEFORE PROCEEDING WITH WORK

NOT FOR CONSTRUCTION

HILLSTONE CHAPEL HILL
1730 FORDHAM BLVD.
CHAPEL HILL, NORTH CAROLINA 27514

UNDERGROUND SANDFILTER WEST DETAILS

LEON CAPITAL GROUP
5970 FAIRVIEW ROAD, SUITE 450
CHARLOTTE, NORTH CAROLINA 28210

NO.	DATE	REVISIONS	BY
4	7/31/2017	TOWN COMMENT REVISIONS REVIEW #4	WRA
3	6/15/2017	TOWN COMMENT REVISIONS REVIEW #3	WRA
2	4/7/2017	TOWN COMMENT REVIEW #2	WRA
1	2/20/2017	REVISIONS PER TOWN'S REVIEW COMMENTS	WRA

ALL DOCUMENTS PREPARED BY PENNONI ASSOCIATES ARE INSTRUMENTS OF SERVICE IN RESPECT OF THE PROJECT. THEY ARE NOT INTENDED OR REPRESENTED TO BE SUITABLE FOR REUSE BY OWNER OR OTHERS ON THE EXTENSIONS OF THE PROJECT OR ON ANY OTHER PROJECT. ANY REUSE WITHOUT WRITTEN VERIFICATION OR ADAPTATION BY PENNONI ASSOCIATES FOR THE SPECIFIC PURPOSE INTENDED WILL BE AT OWNERS SOLE RISK AND WITHOUT LIABILITY OR LEGAL EXPOSURE TO PENNONI ASSOCIATES; AND OWNER SHALL INDEMNIFY AND HOLD HARMLESS PENNONI ASSOCIATES FROM ALL CLAIMS, DAMAGES, LOSSES AND EXPENSES ARISING OUT OF OR RESULTING THEREFROM.

PROJECT	LCGR1602
DATE	DECEMBER 7, 2016
DRAWING SCALE	1" = 30'
DRAWN BY	WRA
APPROVED BY	TAS

CS6023

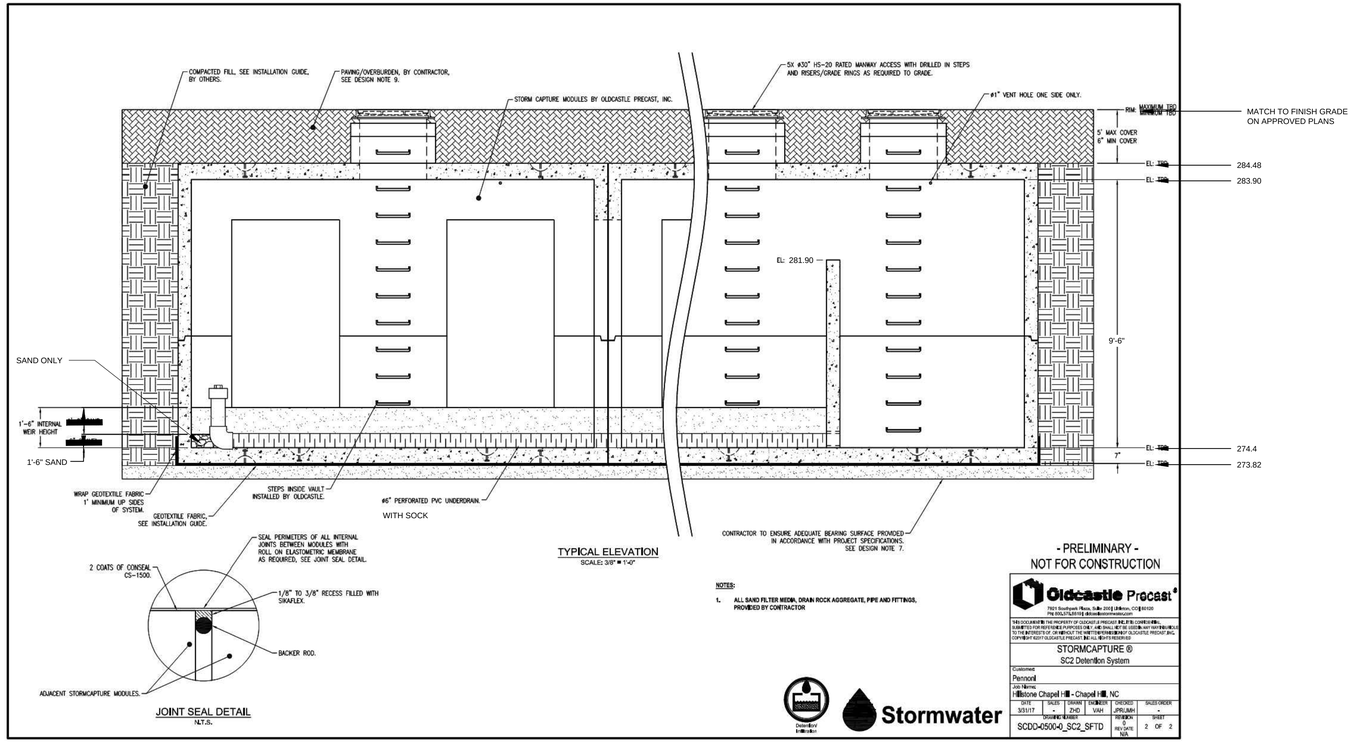

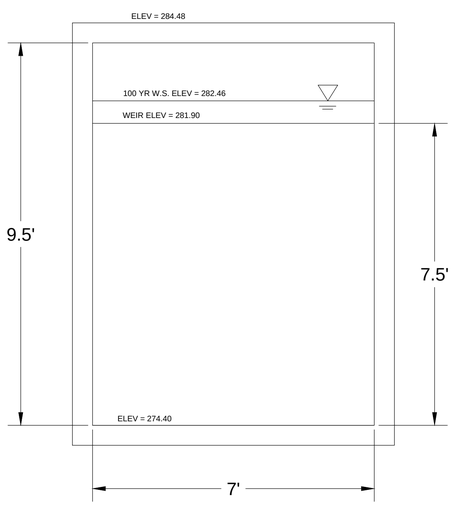

REVISIONS

REVISION	DATE	REV BY	DESCRIPTION OF REVISION
0	N/A	N/A	

BILL OF MATERIALS

TYPE	QUANTITY	HEIGHT
B	1	10'
B1	1	10'
C1	1	10'
E	1	10'
E1	1	10'
F1	1	10'
TOTALS:		
8" TOP	8	
8" BASE	8	
7" WEIR WALL	1	
30"MANWAY ACCESS	5	
DRILLED INSTEPS	77	
VOLUME	6,600	CUBIC FEET
GEOTEXTILE FASBRIC	1	ROLLS
BUTYL ROPE	4	ROLLS
JOINT WRAP	4	ROLLS
CS-1500 SEALANT	1	BUCKET

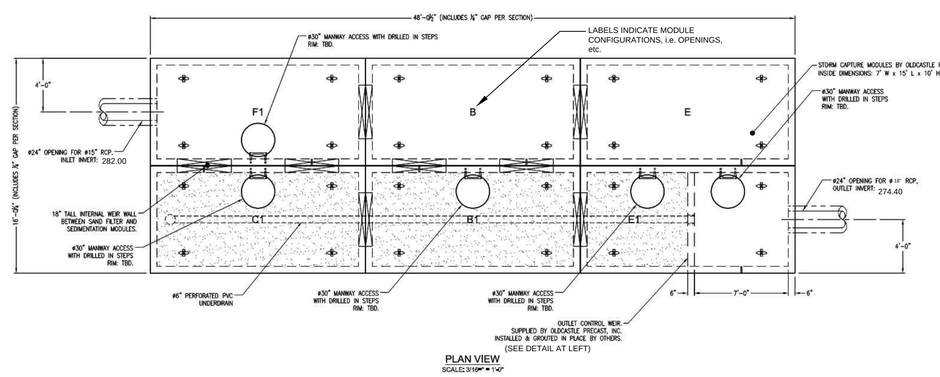

West System

DESIGN NOTES:
1. DESIGN LOADINGS:
   A. AASHTO HS-20-44 W/ IMPACT.
   B. DEPTH OF COVER = 6" - 5'-0" (120 PCF ASSUMED).
   C. ASSUMED WATER TABLE = BELOW BOTTOM OF PRECAST.
   D. DRY LATERAL EARTH PRESSURE (EFP) = 45 PCF.
   E. LATERAL LIVE LOAD SURCHARGE = 80 PSF (APPLIED TO 8' BELOW GRADE).
   F. NO LATERAL SURCHARGE FROM ADJACENT BUILDINGS, WALL PIERS, OR FOUNDATIONS.
2. CONCRETE: 28 DAY COMPRESSIVE STRENGTH SHALL BE 6,000 PSI.
3. STEEL REINFORCEMENT: REBAR, ASTM A-615 OR A-706, GRADE 60.
4. CEMENT: ASTM C-150 SPECIFICATION.
5. STORM CAPTURE MODULE TYPE = DETENTION.
6. REQUIRED BASE LAYER DEPTH = NOT APPLICABLE.
7. REQUIRED NATIVE ALLOWABLE SOIL BEARING PRESSURE = 2,500 PSF.
8. REFERENCE STANDARDS:
   A. ASTM C 890
   B. ASTM C 891
   C. ASTM C 913
9. ANY DESIGN CONSTRAINT DIFFERENT FROM ABOVE REQUIRES CUSTOM STRUCTURAL DESIGN AND MAY REQUIRE THICKER SUBGRADE AND REVISED PRICING.

NOTES TO REVIEWING ENGINEER:
1. THIS SYSTEM IS DESIGNED TO THE PARAMETERS NOTED. PLEASE VERIFY THAT THESE PARAMETERS MEET PROJECT REQUIREMENTS (I.E. LIVE LOAD AND FILL RANGE). IF DESIGN PARAMETERS ARE INCORRECT NOTIFY OLDCASTLE IMMEDIATELY FOR REDESIGN AND RE-PRICING.
2. REVIEWING ENGINEER TO CONFIRM ALL PIPE PENETRATION LOCATIONS, SIZES, AND INVERTS.
3. REVIEWING ENGINEER TO CONFIRM ALL MANWAY ACCESS LOCATIONS AND RIM ELEVATIONS.
4. UNLESS OTHERWISE NOTED, ALL PIPE SUPPLIED AND INSTALLED BY OTHERS.
5. THIS SYSTEM IS DESIGNED FOR A GROUNDWATER TABLE BELOW SYSTEM INVERT. REVIEWING ENGINEER TO VERIFY THAT THE DESIGN GROUNDWATER TABLE IS BELOW INVERT OF PRECAST. IF DESIGN PARAMETERS ARE INCORRECT NOTIFY OLDCASTLE IMMEDIATELY FOR REDESIGN AND REVISED PRICING.
6. THIS SYSTEM IS DESIGNED WITHOUT A CONTAINMENT MEMBRANE LINER. IF A LINER IS NEEDED PLEASE CONTACT OLDCASTLE TO PROVIDE THIS OPTION IN THE FINAL DESIGN.

- PRELIMINARY -
NOT FOR CONSTRUCTION

Oldcastle Precast
7501 Southpark Plaza, Suite 202 | Littleton, CO 80120
PH: 303.773.8110 | dickson@oldcastleprecast.com

THIS DOCUMENT IS THE PROPERTY OF OLDCASTLE PRECAST, INC. IT IS CONFIDENTIAL, SUBMITTED FOR REFERENCE PURPOSES ONLY, AND SHALL NOT BE USED IN ANY WAY PREJUDICIAL TO THE INTERESTS OF OLDCASTLE PRECAST, INC. WITHOUT WRITTEN CONSENT OF OLDCASTLE PRECAST, INC. COPYRIGHT ©2017 OLDCASTLE PRECAST, INC. ALL RIGHTS RESERVED.

STORMCAPTURE ®
SC2 Detention System

Customer: Pennoni
Job Name: Hillstone Chapel Hill - Chapel Hill, NC

DATE	SALES	DRAWN	ENGINEER	CHECKED	SALES ORDER
3/31/17	-	ZHD	VAH	JPR/JMH	-

DRAWING NUMBER: SCDD-05004-0_SC2_SFTD
REVISION: REV DATE N/A
SHEET: 1 OF 2

Stormwater

NOTES:

1. THE MEDIA IN THE SAND FILTER SHALL BE CLEANED, WASHED, COARSE MASONRY SAND SUCH AS ASTM C33. THE SAND PARTICLES SHALL BE LESS THAN 2mm AVERAGE.

2. A COPY OF THE PURCHASE RECEIPT FOR THE SAND MATERIAL USED IN FILLING THE SYSTEM SHALL BE PROVIDED WITH THE AS-BUILT SUBMITTALS PRIOR TO THE ISSUANCE OF THE CERTIFICATE OF OCCUPANCY. THE PURCHASE RECEIPT SHALL IDENTIFY THE ASTM SPECIFICATION.

3. PICTURES OF THE WEIR AND ORIFICES IN THE UNDERGROUND DETENTION SYSTEM SHALL BE PROVIDED WITH THE AS-BUILT SUBMITTALS.

4. ALL MANHOLE ACCESS LIDS TO BE SOLID TO PREVENT POLLUTANTS FROM SURFACE WATER FROM ENTERING THE SAND FILTER SYSTEM.

PHILIP POST & ASSOCIATES
A Division of Pennoni Firm License F-1267
PENNONI ASSOCIATES INC.
401 Providence Road #200
Chapel Hill, NC 27514
T 919.929.1173 F 919.493.6548

ALL DIMENSIONS MUST BE VERIFIED BY CONTRACTOR AND OWNER MUST BE NOTIFIED OF ANY DISCREPANCIES BEFORE PROCEEDING WITH WORK.

NOT FOR CONSTRUCTION
NORTH CAROLINA PROFESSIONAL SEAL 030517 ENGINEER TIMOTHY A. SMITH

HILLSTONE CHAPEL HILL
1730 FORDHAM BLVD.
CHAPEL HILL, NORTH CAROLINA 27514

UNDERGROUND DETENTION WEST DETAILS

LEON CAPITAL GROUP
5970 FAIRVIEW ROAD, SUITE 450
CHARLOTTE, NORTH CAROLINA 28210

NO.	DATE	REVISIONS	BY
4	7/31/2017	TOWN COMMENT REVISIONS REVIEW #4	WRA
3	6/15/2017	TOWN COMMENT REVISIONS REVIEW #3	WRA
2	4/7/2017	TOWN COMMENT REVIESIONS REVIEW #2	WRA
1	2/20/2017	REVISIONS PER TOWNS REVIEW COMMENTS	WRA

ALL DOCUMENTS PREPARED BY PENNONI ASSOCIATES ARE INSTRUMENTS OF SERVICE IN RESPECT OF THE PROJECT. THEY ARE NOT INTENDED OR REPRESENTED TO BE SUITABLE FOR REUSE BY OWNER OR OTHERS ON THE EXTENSIONS OF THE PROJECT OR ON ANY OTHER PROJECT. ANY REUSE WITHOUT WRITTEN VERIFICATION OR ADAPTATION BY PENNONI ASSOCIATES FOR THE SPECIFIC PURPOSE INTENDED WILL BE AT OWNERS SOLE RISK AND WITHOUT LIABILITY OR LEGAL EXPOSURE TO PENNONI ASSOCIATES, AND OWNER SHALL INDEMNIFY AND HOLD HARMLESS PENNONI ASSOCIATES FROM ALL CLAIMS, DAMAGES, LOSSES AND EXPENSES ARISING OUT OF OR RESULTING THEREFROM.

PROJECT	LCGR1602
DATE	DECEMBER 7, 2016
DRAWING SCALE	1" = 30'
DRAWN BY	WRA
APPROVED BY	TAS

CS6024

P:\Projects\LCGROCMLCGR1602-Aspirment Site\DESIGN_PUBLISH\CS6024.dwg PLOTTED: 8/16/2017 4:43 PM, BY: Donald Crotty PLOTSTYLE: Pennoni NCS.ctb PROJECT STATUS: DESIGN DEVELOPMENT

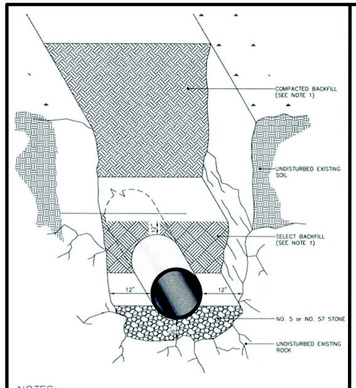

NOTES:
1. See specification section 02275 Trenching, Backfilling, and Compaction of Utilities for backfill and compaction requirements.

ORANGE WATER AND SEWER AUTHORITY
DETAIL of ROCK EXCAVATION
S511.01

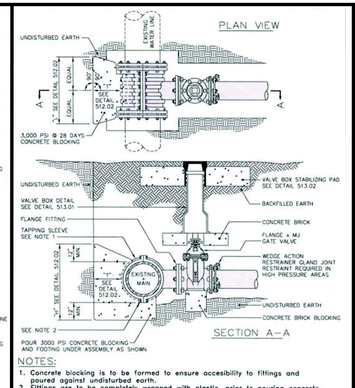

NOTES:
1. Concrete blocking is to be formed to ensure accesibility to fittings and poured against undisturbed earth.
2. Fittings are to be completely wrapped with plastic, prior to pouring concrete.
3. Concrete to be minimum 3,000 psi. @ 28 days.
4. Taps onto in-service mains by OWASA personnel only.

ORANGE WATER AND SEWER AUTHORITY
4" to 12" STANDARD TAPPING SLEEVE and VALVE ASSEMBLY
S512.04

#	PART	MANUFACTURER MODEL / Cat. No.
1	COMPOUND METER OR TURBINE METER	TO BE APPROVED BY OWASA
2	OS&Y FULL GATE VALVE WITH RESILIENT SEATS	TO BE APPROVED BY OWASA
3	STRAINER	TO BE APPROVED BY OWASA
4	DIP CLASS 350	SIZE & TYPE DETERMINED BY NC PE
5	DIP CLASS 350	SIZE & TYPE DETERMINED BY NC PE
6	FLOOR DRAIN WITH STRAINER	SIZE & TYPE DETERMINED BY NC PE BASED ON SIZE OF WATER MAIN. (TO BE APPROVED BY OWASA)
7	MORTARED MASONRY BLOCK PIPE SUPPORTS (MINIMUM 4 REQUIRED)	
8	PRECAST CONCRETE UTILITY VAULT BOX. MIN. 4,000 PSI @ 28 DAYS. VERIFY FITTINGS WILL FIT INSIDE BOX BEFORE ORDERING	STAY-RIGHT PRECAST VAULT, H20 LOAD RATING (OR APPROVED EQUIVALENT)
9	DIP FLANGED TEE	AMERICAN CAST IRON PIPE, UNION-TYLER PIPE CO., or U.S. PIPE & FOUNDRY
10	4"–0" MIN. WIDTH (I.D.) x 4"–0" LONG (I.D.) RISER. SEE SHEET 2 of 3 FOR MINIMUM LENGTH.	STAY-RIGHT PRECAST VAULT, H20 LOAD RATING (OR APPROVED EQUIVALENT)
11	4' WIDE x 4' LONG DOOR CAST INTO RISER (DRAIN TO OUTSIDE) SEE SHEET 2 of 3 FOR MINIMUM LENGTH.	BILCO OR WALKBY PRODUCTS DOUBLE LEAF ACCESS DOOR. USE H20 LOADING IN ALL AREAS. DRAIN TO OUTSIDE. (OR APPROVED EQUAL)
12	WALL SLEEVE WITH LINK SEAL (OR APPROVED EQUIVALENT)	TO BE APPROVED BY OWASA
13	REMOTE METER READOUT (IN GALLONS) ELECTRONIC ERT	TO BE APPROVED BY OWASA
14	DIP FLANGE x FLANGE, SPOOL PIPE OR THREADED END FOR FLANGE (VERIFY LENGTH)	AMERICAN CAST IRON PIPE, U.S. PIPE & FOUNDRY
15	DIP FLANGED 90° ELBOW (SHORT RADIUS)	AMERICAN CAST IRON PIPE, UNION–TYLER PIPE CO., or U.S. PIPE & FOUNDRY
16	4", 6" OR 8" DIP FLANGED x PE PIPE (USE 1 FULL LENGTH JOINT PIPE)	AMERICAN CAST IRON PIPE, UNION–TYLER PIPE CO., or U.S. PIPE & FOUNDRY
17	FLANGED ADAPTOR	UNIFLANGE (TO BE APPROVED BY OWASA)
18	DIP FLANGED 4"x3" REDUCER	AMERICAN CAST IRON PIPE, UNION–TYLER PIPE CO., or U.S. PIPE & FOUNDRY
19		
20	OS&Y GATE VALVE WITH RESILIENT SEATS	DRILL STEM FOR SEALING IN CLOSED POSITION (TO BE APPROVED BY OWASA)
21	METER BOX	CDR SYSTEMS CORP. / W404–1118–12C MID–STATES PLASTICS, INC. / MSBC 1118–12

NOTES:
1. Ensure positive surface grade away from box.
2. 3" Meter to use 4" OS&Y DI valves and (2) 4"x3" DI flanged reducers with section of 3" flanged DI pipe and 3" DI flanged coupling adaptor.
3. For vaults less than 6'–6" high see detail 515.14

ORANGE WATER AND SEWER AUTHORITY
3" to 8" WATER METER WITH BYPASS (UNDER GROUND VAULT)
S515.13

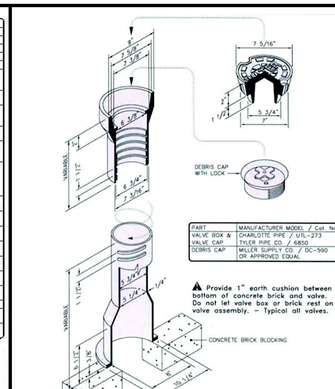

PART	MANUFACTURER MODEL / Cat. No.
VALVE BOX & VALVE CAP	CHARLOTTE PIPE / U15–233 TYLER PIPE CO. / 6850
DEBRIS CAP	MILLER SUPPLY CO. / DC–550 OR APPROVED EQUAL

Provide 1" earth cushion between bottom of concrete brick and valve. Do not let valve box or brick rest on valve assembly. – Typical all valves.

NOTES:
1. Use heavy duty traffic lid marked "WATER".

ORANGE WATER AND SEWER AUTHORITY
STANDARD SCREW VALVE BOX DETAIL

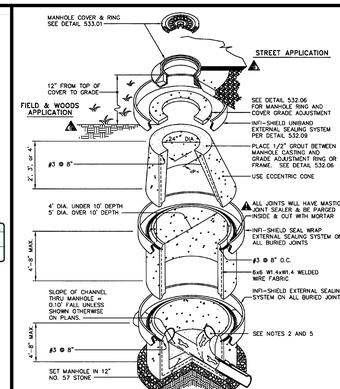

ORANGE WATER AND SEWER AUTHORITY
STANDARD ECCENTRIC MANHOLE DETAIL
532.01

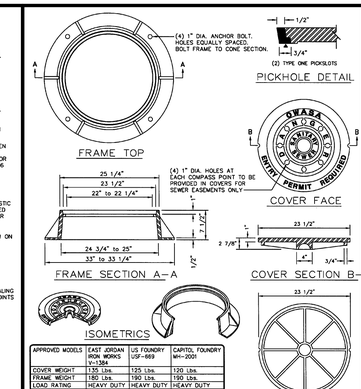

APPROVED MODELS	EAST JORDAN IRON WORKS V–1384	US FOUNDRY USF–869	CAPITOL FOUNDRY MH–2001
COVER WEIGHT	135 Lbs.	125 Lbs.	120 Lbs.
FRAME WEIGHT	180 Lbs.	190 Lbs.	190 Lbs.
LOAD RATING	HEAVY DUTY	HEAVY DUTY	HEAVY DUTY
MATERIAL	ASTM A 48 CLASS 350	ASTM A 48 CLASS 350	ASTM A 48 CLASS 350
FINISH	UNCOATED	UNCOATED	UNCOATED

ORANGE WATER AND SEWER AUTHORITY
SANITARY SEWER MANHOLE FRAME and COVER

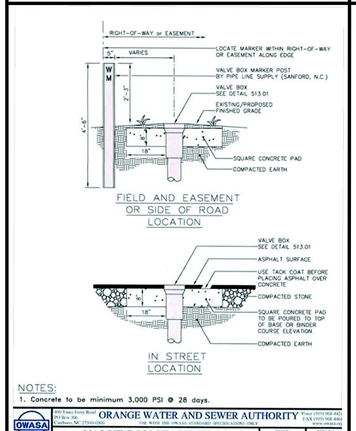

NOTES:
1. Concrete to be minimum 3,000 PSI @ 28 days.

ORANGE WATER AND SEWER AUTHORITY
VALVE BOX STABILIZING PAD DETAILS
513.02

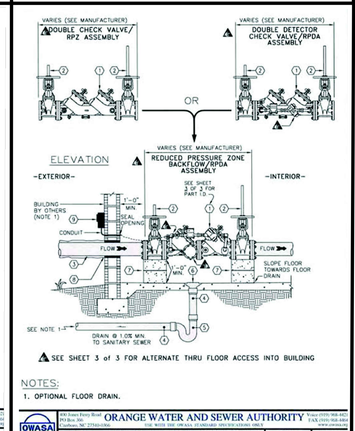

SEE SHEET 3 of 3 FOR ALTERNATE THRU FLOOR ACCESS INTO BUILDING

NOTES:
1. OPTIONAL FLOOR DRAIN.

ORANGE WATER AND SEWER AUTHORITY
2 1/2" to 10" DCV, DDCV, RPZ, RPDA ASSEMBLY (INDOOR)
S515.09

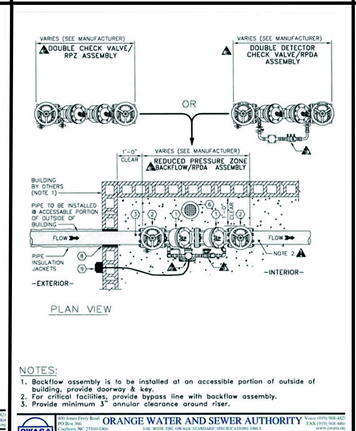

NOTES:
1. Backflow assembly is to be installed at an accessible portion of outside of building, provide doorway & key.
2. For critical facilities, provide bypass line with backflow assembly.
3. Provide minimum 3" annular clearance around riser.

ORANGE WATER AND SEWER AUTHORITY
2 1/2" to 10" DCV, DDCV, RPZ, RPDA ASSEMBLY (INDOOR)
S515.09

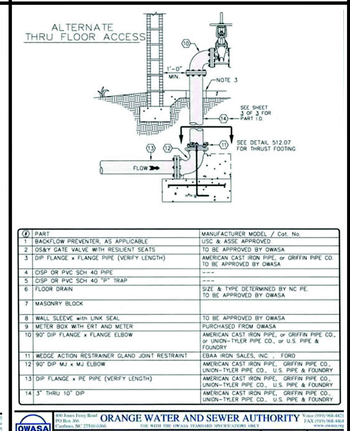

#	PART	MANUFACTURER MODEL / Cat. No.
1	BACKFLOW PREVENTER, AS APPLICABLE	USC & ASSE APPROVED
2	OS&Y GATE VALVE WITH RESILIENT SEATS	TO BE APPROVED BY OWASA
3	DIP FLANGE x FLANGE PIPE (VERIFY LENGTH)	AMERICAN CAST IRON PIPE, or GRIFFIN PIPE CO.; or UNION–TYLER PIPE CO., or U.S. PIPE & FOUNDRY
4	CISP OR PVC SCH 40 PIPE	----
5	CISP OR PVC SCH 40 "P" TRAP	----
6	FLOOR DRAIN	SIZE & TYPE DETERMINED BY NC PE. TO BE APPROVED BY OWASA
7	MASONRY BLOCK	
8	WALL SLEEVE with LINK SEAL	TO BE APPROVED BY OWASA
9	METER BOX WITH ERT AND METER	PURCHASED FROM OWASA
10	90° DIP FLANGE x FLANGE ELBOW	AMERICAN CAST IRON PIPE, or GRIFFIN PIPE CO.; or UNION–TYLER PIPE CO., U.S. PIPE & FOUNDRY
11	MEDGE ACTION RESTRAINER GLAND JOINT RESTRAINT	EBAA IRON SALES, INC. / FORD
12	90° DIP MJ x MJ ELBOW	AMERICAN CAST IRON PIPE, GRIFFIN PIPE CO., UNION–TYLER PIPE CO., U.S. PIPE & FOUNDRY
13	DIP FLANGE x PE PIPE (VERIFY LENGTH)	AMERICAN CAST IRON PIPE, GRIFFIN PIPE CO., UNION–TYLER PIPE CO., U.S. PIPE & FOUNDRY
14	3" THRU 10" DIP	AMERICAN CAST IRON PIPE, GRIFFIN PIPE CO., UNION–TYLER PIPE CO., U.S. PIPE & FOUNDRY

NOTES:
1. Backflow assembly is to be installed at an accessible portion of outside of building, provide doorway & key.
2. For critical facilities, provide bypass line with backflow assembly.
3. Provide minimum 3" annular clearance around riser.

ORANGE WATER AND SEWER AUTHORITY
2 1/2" to 10" DCV, DDCV, RPZ, RPDA ASSEMBLY (INDOOR)
S515.09

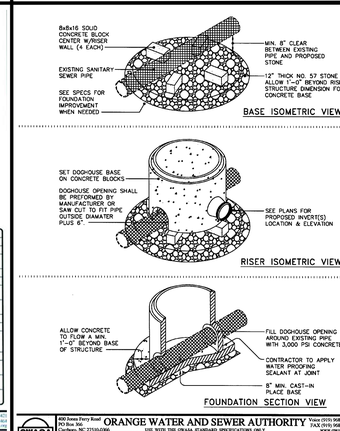

ORANGE WATER AND SEWER AUTHORITY
PRECAST CONCRETE DOGHOUSE MANHOLE
532.08

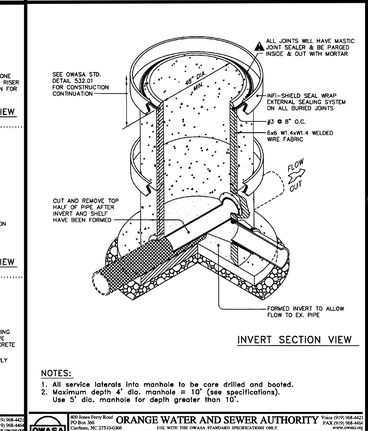

NOTES:
1. All service laterals into manhole to be core drilled and booted.
2. Maximum depth 4' dia. manhole = 10' (see specifications). Use 5' dia. manhole for depth greater than 10'.

ORANGE WATER AND SEWER AUTHORITY
PRECAST CONCRETE DOGHOUSE MANHOLE
532.08

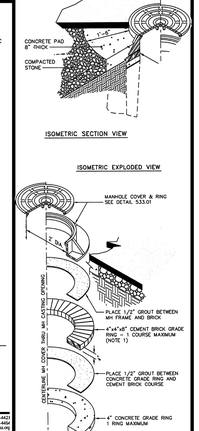

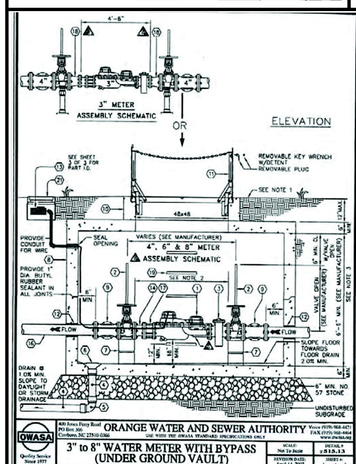

ORANGE WATER AND SEWER AUTHORITY
3" to 8" WATER METER WITH BYPASS (UNDER GROUND VAULT)
S515.13

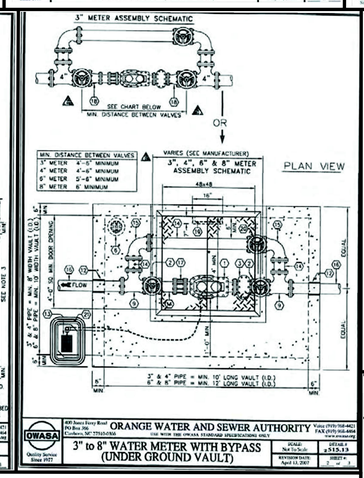

ORANGE WATER AND SEWER AUTHORITY
3" to 8" WATER METER WITH BYPASS (UNDER GROUND VAULT)
S515.13

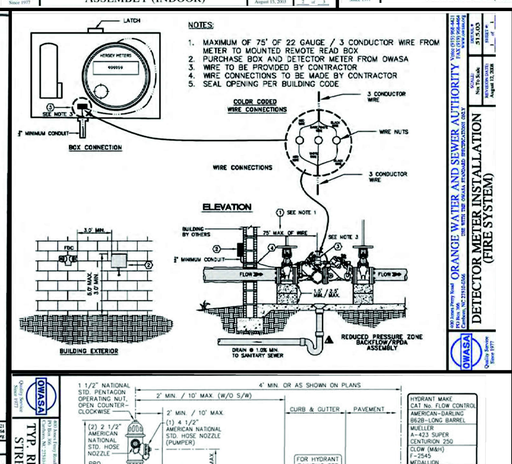

NOTES:
1. MAXIMUM OF 75' OF 22 GAUGE / 3 CONDUCTOR WIRE FROM METER TO MOUNTED REMOTE READ BOX
2. PURCHASE BOX AND DETECTOR METER FROM OWASA
3. WIRE TO BE PROVIDED BY CONTRACTOR
4. WIRE CONNECTIONS TO BE MADE BY CONTRACTOR
5. SEAL OPENING PER BUILDING CODE

ORANGE WATER AND SEWER AUTHORITY
DETECTOR METER INSTALLATION (FIRE SYSTEM)
S515.03

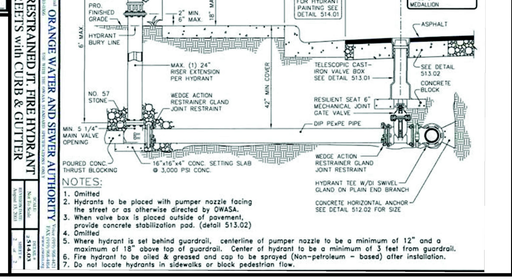

NOTES:
1. Omitted
2. Hydrants to be placed with pumper nozzle facing the street or as otherwise directed by OWASA.
3. When valve box is placed outside of pavement, provide concrete stabilization pad. (detail 513.02)
4. Omitted
5. Where hydrant is set behind guardrail, centerline of pumper nozzle to be a minimum of 12" and a maximum of 18" above top of guardrail. Center of hydrant to be a minimum of 3 feet from guardrail.
6. Fire hydrant to be oiled & greased and cap to be sprayed (Non–petroleum – based) after installation.
7. Do not locate hydrants in sidewalks or block pedestrian flow.

ORANGE WATER AND SEWER AUTHORITY
TYP. RESTRAINED FT. FIRE HYDRANT STREETS with CURB & GUTTER
S514.01

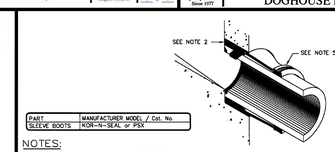

PART	MANUFACTURER MODEL / Cat. No.
SLEEVE BOOTS	KOR–N–SEAL or PSX

NOTES:
1. Concrete strength to be 4,000 PSI minimum.
2. Pipes will be grouted inside and out.
3. Joints will have mastic joint sealer and be parged inside and out with mortar.
4. Reinforcement design to conform to the requirements of ASTM C478.
5. Flexible sleeve boots cast in place or installed with stainless steel expander rings as manufactured by Kor–N–Seal or PSX shall be used for pipe connections. Boots shall be secured to pipe using (2) stainless steel bands. Precast inverts will not be accepted, unless otherwise directed by OWASA's inspectors.

ORANGE WATER AND SEWER AUTHORITY
STANDARD ECCENTRIC MANHOLE DETAIL
532.01

CEMENT BRICK AND PRECAST CONCRETE GRADE RINGS

NOTE:
PLACE 1/2" PARGE COAT ON INTERIOR OF MANHOLE FROM HALF DEPTH OF THE IRON CASTING TO A DEPTH OF 2" BELOW THE TOP OF THE CONE SECTION

NOTES:
1. Mortar seal inside & out on brick course.
2. Install Infi–Shield seal wrap as manufactured by Sealing Systems, Inc. per detail 532.09.

ORANGE WATER AND SEWER AUTHORITY
MANHOLE RING AND COVER GRADE ADJUSTMENT
532.06

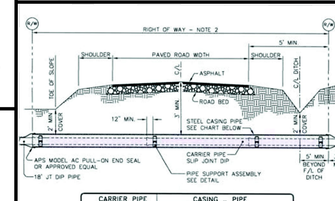

CARRIER PIPE		CASING PIPE				
		RAILROAD		HIGHWAY		
NOMINAL DIAMETER	OUTSIDE DIAMETER	OUTSIDE DIAMETER	WALL THICKNESS	OUTSIDE DIAMETER	WALL THICKNESS	
6" & UNDER	6.90"	12 3/4"	0.188"	12 3/4"	0.250"	
8"	9.05"	16"	0.250"	16"	0.250"	
10"	11.10"	20"	0.281"	20"	0.250"	
12"	13.20"	24"	0.344"	24"	0.250"	
14"	15.30"	28"	0.406"	28"	0.312"	
16"	17.40"	30"	0.406"	30"	0.312"	
20"	21.60"	42"	0.563"	42"	0.312"	
24"	25.80"	42"	0.563"	42"	0.312"	

* DIMENSIONS ARE WITHOUT COATINGS

NOTES:
1. Installation by dry bore & jacking.
2. Bore to run from Right–of–Way to Right–of–Way unless approved otherwise by OWASA.
3. Grease encasement pipe as required for ease of installation.
4. Steel pipe to be 35,000 psi min. yield strength, grade B.
5. All exposed metal to be coated with epoxy or asphaltic material.
6. Skids to be installed, manufactured by ITT Grinnell, Charlotte, N.C. / Spider Manufacturing, Durham, N.C. / APS casing spacers by Advanced Products Systems Inc, Lafayette, LA. / or approved equal.

ORANGE WATER AND SEWER AUTHORITY
TYPICAL DETAIL for BORE UNDER PAVED ROADS / HIGHWAYS
517.01

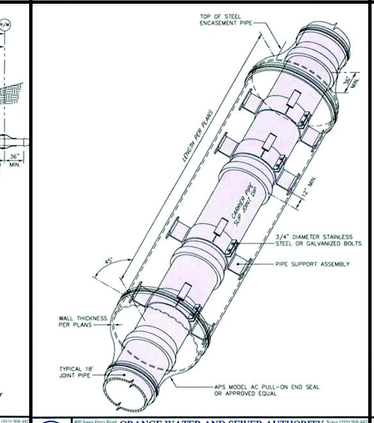

ORANGE WATER AND SEWER AUTHORITY
TYPICAL DETAIL for BORE UNDER PAVED ROADS / HIGHWAYS
517.01

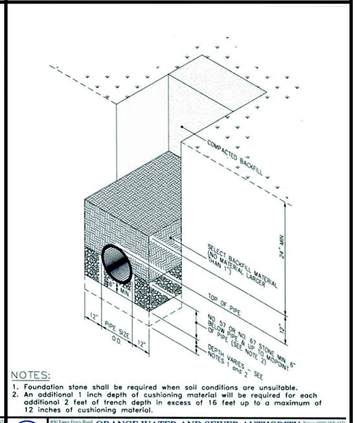

NOTES:
1. Foundation stone shall be required when soil conditions are unsuitable.
2. An additional 1 inch depth of cushioning material will be required for each additional 2 feet of trench depth in excess of 16 feet up to a maximum of 12 inches of cushioning material.

ORANGE WATER AND SEWER AUTHORITY
SANITARY SEWER BEDDING DETAIL
531.01

PROJECT STATUS: DESIGN DEVELOPMENT

PLOTTED: 8/16/2017 4:44 PM, BY: Donald Crilly PLOTSTYLE: Pennoni NCS.stb

P:\Projects\LCGRC\LCGR1602-Apartment Site\DESIGN_PUBLISH\CS6041.dwg

PHILIP POST & ASSOCIATES
A Division of PENNONI Firm License F-1267
PENNONI ASSOCIATES INC.
401 Providence Road #200
Chapel Hill, NC 27514
T 919.929.1173 F 919.493.6548

ALL DIMENSIONS MUST BE VERIFIED BY CONTRACTOR AND OWNER MUST BE NOTIFIED OF ANY DISCREPANCIES BEFORE PROCEEDING WITH WORK

NOT FOR CONSTRUCTION
PHILIP POST ASSOCIATES
NORTH CAROLINA
030517
TIMOTHY A. CRILLY
ENGINEER

HILLSTONE CHAPEL HILL
1730 FORDHAM BLVD.
CHAPEL HILL, NORTH CAROLINA 27514

O.W.A.S.A. DETAILS

LEON CAPITAL GROUP
5970 FAIRVIEW ROAD, SUITE 450
CHARLOTTE, NORTH CAROLINA 28210

NO.	DATE	REVISIONS	BY
4	7/31/2017	TOWN COMMENT REVISIONS REVIEW #4	WRA
3	6/15/2017	TOWN COMMENT REVISIONS REVIEW #3	WRA
2	4/17/2017	TOWN COMMENT REVISIONS REVIEW #2	WRA
1	2/20/2017	REVISIONS PER TOWN'S COMMENTS	WRA

ALL DOCUMENTS PREPARED BY PENNONI ASSOCIATES ARE INSTRUMENTS OF SERVICE IN RESPECT OF THE PROJECT. THEY ARE NOT INTENDED OR REPRESENTED TO BE SUITABLE FOR REUSE BY OWNER OR OTHERS ON THE EXTENSIONS OF THE PROJECT OR ON ANY OTHER PROJECT. ANY REUSE WITHOUT WRITTEN VERIFICATION OR ADAPTATION BY PENNONI ASSOCIATES FOR THE SPECIFIC PURPOSE INTENDED WILL BE AT OWNERS SOLE RISK AND WITHOUT LIABILITY OR LEGAL EXPOSURE TO PENNONI ASSOCIATES; AND OWNER SHALL INDEMNIFY AND HOLD HARMLESS PENNONI ASSOCIATES FROM ALL CLAIMS, DAMAGES, LOSSES AND EXPENSES ARISING OUT OF OR RESULTING THEREFROM.

PROJECT	LCGR1602
DATE	DECEMBER 7, 2016
DRAWING SCALE	AS SHOWN
DRAWN BY	WRA
APPROVED BY	TAS

CS6041

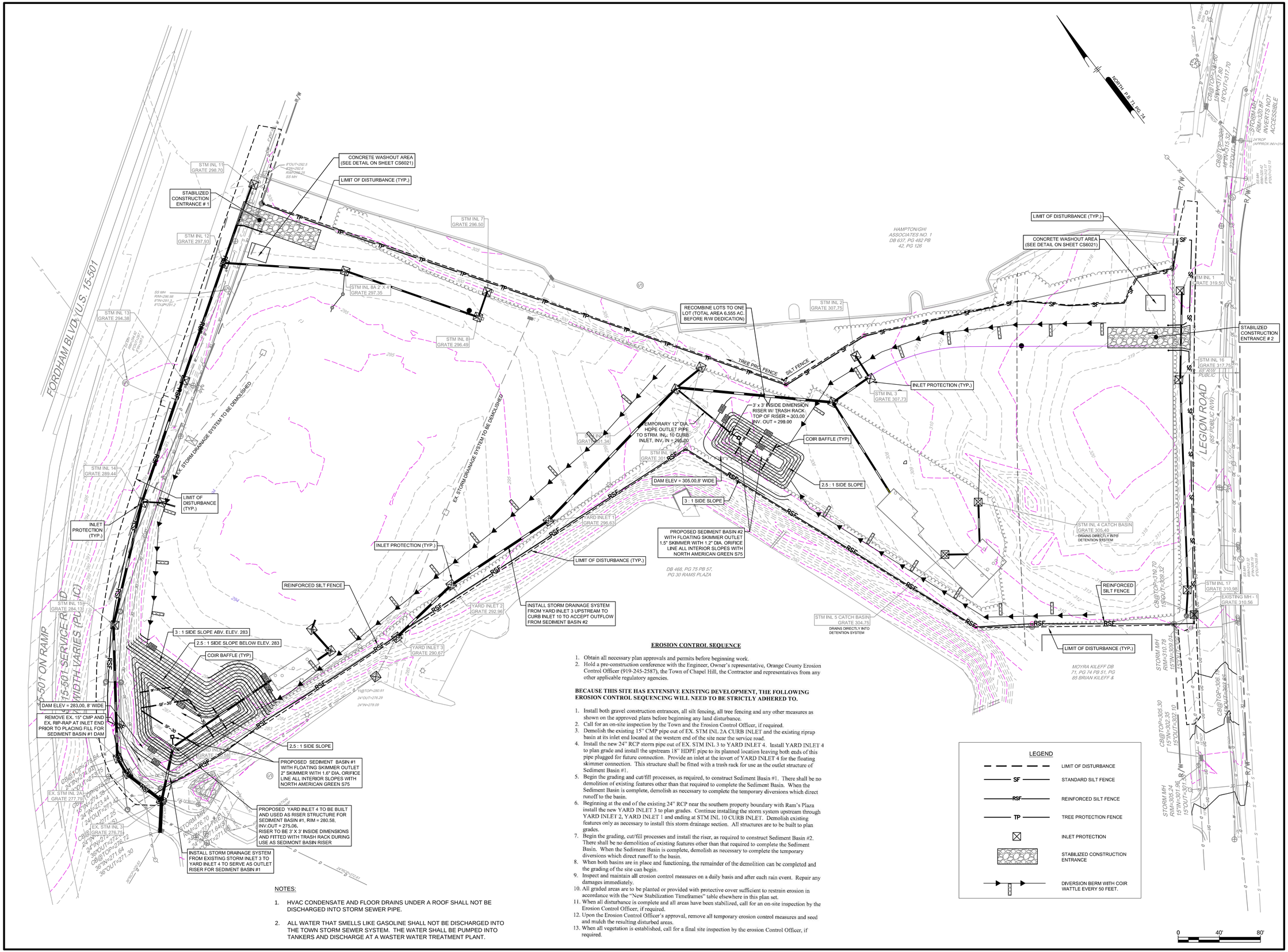

NOTES:

1. HVAC CONDENSATE AND FLOOR DRAINS UNDER A ROOF SHALL NOT BE DISCHARGED INTO STORM SEWER PIPE.
2. ALL WATER THAT SMELLS LIKE GASOLINE SHALL NOT BE DISCHARGED INTO THE TOWN STORM SEWER SYSTEM. THE WATER SHALL BE PUMPED INTO TANKERS AND DISCHARGE AT A WASTER WATER TREATMENT PLANT.

EROSION CONTROL SEQUENCE

1. Obtain all necessary plan approvals and permits before beginning work.
2. Hold a pre-construction conference with the Engineer, Owner's representative, Orange County Erosion Control Officer (919-245-2587), the Town of Chapel Hill, the Contractor and representatives from any other applicable regulatory agencies.

BECAUSE THIS SITE HAS EXTENSIVE EXISTING DEVELOPMENT, THE FOLLOWING EROSION CONTROL SEQUENCING WILL NEED TO BE STRICTLY ADHERED TO.

1. Install both gravel construction entrances, all silt fencing, all tree fencing and any other measures as shown on the approved plans before beginning any land disturbance.
2. Call for an on-site inspection by the Town and the Erosion Control Officer, if required.
3. Demolish the existing 15" CMP pipe out of EX. STM INL 2A CURB INLET and the existing riprap basin at its inlet end located at the western end of the site near the service road.
4. Install the new 24" RCP storm pipe out of EX. STM INL 3 to YARD INLET 4. Install YARD INLET 4 to plan grade and install the upstream 18" HDPE pipe to its planned location leaving both ends of this pipe plugged for future connection. Provide an inlet at the invert of YARD INLET 4 for the floating skimmer connection. This structure shall be fitted with a trash rack for use as the outlet structure of Sediment Basin #1.
5. Begin the grading and cut/fill processes, as required, to construct Sediment Basin #1. There shall be no demolition of existing features other than that required to complete the Sediment Basin. When the Sediment Basin is complete, demolish as necessary to complete the temporary diversions which direct runoff to the basin.
6. Beginning at the end of the existing 24" RCP near the southern property boundary with Ram's Plaza install the new YARD INLET 3 to plan grades. Continue installing the storm system upstream through YARD INLET 2, YARD INLET 1 and ending at STM INL 10 CURB INLET. Demolish existing features only as necessary to install this storm drainage section. All structures are to be built to plan grades.
7. Begin the grading, cut/fill processes and install the riser, as required to construct Sediment Basin #2. There shall be no demolition of existing features other than that required to complete the Sediment Basin. When the Sediment Basin is complete, demolish as necessary to complete the temporary diversions which direct runoff to the basin.
8. When both basins are in place and functioning, the remainder of the demolition can be completed and the grading of the site can begin.
9. Inspect and maintain all erosion control measures on a daily basis and after each rain event. Repair any damages immediately.
10. All graded areas are to be planted or provided with protective cover sufficient to restrain erosion in accordance with the "New Stabilization Timeframes" table elsewhere in this plan set.
11. When all disturbance is complete and all areas have been stabilized, call for an on-site inspection by the Erosion Control Officer, if required.
12. Upon the Erosion Control Officer's approval, remove all temporary erosion control measures and seed and mulch the resulting disturbed areas.
13. When all vegetation is established, call for a final site inspection by the erosion Control Officer, if required.

PHILIP POST & ASSOCIATES
A Division of PENNONI
Firm License F-1267
PENNONI ASSOCIATES INC.
401 Providence Road #200
Chapel Hill, NC 27514
T 919.929.1173 F 919.493.6548

ALL DIMENSIONS MUST BE VERIFIED BY CONTRACTOR AND OWNER MUST BE NOTIFIED OF ANY DISCREPANCIES BEFORE PROCEEDING WITH WORK

NOT FOR CONSTRUCTION
PROFESSIONAL SEAL
NORTH CAROLINA
030511
ENGINEER
TIMOTHY A. SCOTT

HILLSTONE CHAPEL HILL

1730 FORDHAM BLVD.
CHAPEL HILL, NORTH CAROLINA 27514

SOIL EROSION AND SEDIMENT CONTROL PLAN

LEON CAPITAL GROUP
5970 FAIRVIEW ROAD, SUITE 450
CHARLOTTE, NORTH CAROLINA 28210

DATE	NO.	REVISIONS	BY
7/31/2017	4	TOWN COMMENT REVISIONS REVIEW #4	WRA
6/15/2017	3	TOWN COMMENT REVISIONS REVIEW #3	WRA
4/7/2017	2	TOWN COMMENTS REVISIONS REVIEW #2	WRA
2/20/2017	1	REVISIONS PER TOWN'S REVIEW COMMENTS	WRA

ALL DOCUMENTS PREPARED BY PENNONI ASSOCIATES ARE INSTRUMENTS OF SERVICE IN RESPECT OF THE PROJECT. THEY ARE NOT INTENDED OR REPRESENTED TO BE SUITABLE FOR REUSE BY OWNER OR OTHERS ON THE EXTENSIONS OF THE PROJECT OR ON ANY OTHER PROJECT. ANY REUSE WITHOUT WRITTEN VERIFICATION OR ADAPTATION BY PENNONI ASSOCIATES FOR THE SPECIFIC PURPOSE INTENDED WILL BE AT OWNER'S SOLE RISK AND WITHOUT LIABILITY OR LEGAL EXPOSURE TO PENNONI ASSOCIATE; AND OWNER SHALL INDEMNIFY AND HOLD HARMLESS PENNONI ASSOCIATES FROM ALL CLAIMS, DAMAGES, LOSSES AND EXPENSES ARISING OUT OF OR RESULTING THEREFROM.

PROJECT	LCGR1602
DATE	DECEMBER 7, 2016
DRAWING SCALE	1"= 40'
DRAWN BY	BF
APPROVED BY	TAS

CS8001

SHEET 27 OF 28

P:\Projects\LCGRCOWL\LCGR1602-Apartment Site\DESIGN_PUBLISH\CS8001.dwg PLOTTED: 8/16/2017 4:48 PM, BY: Donald Crisby PLOTSTYLE: Pennoni MCS.stb PROJECT STATUS: DESIGN/DEVELOPMENT

INSTRUCTIONS FOR TEMPORARY STABILIZATION USING

VEGETATION

INSTALLATION

1. REFER TO PLANS FOR LOCATION, EXTENT, AND SPECIFICATIONS. IF THERE ARE QUESTIONS OR PROBLEMS WITH THE LOCATION, EXTENT, OR METHODS OF INSTALLATION, CONTACT THE ENGINEER, ARCHITECT, OR RESPONSIBLE PERSONNEL ON THE SITE FOR ASSISTANCE. EROSION CONTROL PERSONNEL HAVE COPIES OF INSTRUCTIONS AND MAY BE ABLE TO OFFER ASSISTANCE.

   IF THE DISTURBANCE IS NOT PROPERLY STABILIZED THE FIRST TIME SO THAT EROSION IS RESTRAINED, THE SEEDING WILL HAVE TO BE REPEATED.

2. USE THE APPLICATION RATES FOR LIME, FERTILIZER, SEED, MULCH, ETC. SPECIFIED IN THE PLAN, OR USE THE RATES BELOW FOR THE APPROPRIATE SEASON.

ALL SEASONS:

LIME: 90 POUNDS PER 1000 SQUARE FEET (2 TONS PER ACRE).
FERTILIZER: 10-10-10; 16 POUNDS PER 1000 SQUARE FEET (700 POUNDS PER ACRE).
STRAW MULCH: 80 POUNDS PER 1000 SQUARE FEET (1.5 TO 2 TONS PER ACRE); USE ENOUGH STRAW TO COVER 75% OF THE GROUND.

MARCH - MAY

RYE GRAIN: 3 POUNDS PER 1000 SQUARE FEET (150 POUNDS PER ACRE).
OR
SPRING OATS: 3 POUNDS PER 1000 SQUARE FEET (125 POUNDS PER ACRE).

MAY - AUGUST

MILLET: 1 POUND PER 1000 SQUARE FEET (40 POUNDS PER ACRE).
OR
SORGHUM HYBRIDS: 1 POUND PER 1000 SQUARE FEET (40 POUNDS PER ACRE).

AUGUST 15 - NOVEMBER 15

OATS: BEFORE OCTOBER 1: 2.5 POUNDS PER 1000 SQUARE FEET (125 POUNDS PER ACRE).
OR
WHEAT: AFTER OCTOBER 1: 3 POUNDS PER 1000 SQUARE FEET (180 POUNDS PER ACRE).

NOVEMBER 15 - FEBRUARY

VEGETATION IS NOT AN APPROPRIATE STABILIZATION DURING THESE SEASONS; USE ANOTHER TYPE OF TEMPORARY GROUND COVER, SUCH AS MULCHING.

3. **SEEDBED PREPARATION:** REMOVE ROCKS, STUMPS, ROOTS, ETC. SINCE THEY WILL INTERFERE WITH SEEDING AND MAINTENANCE. THE SMOOTH, COMPACTED SURFACE OF CUT AND FILL SLOPES IS NOT A GOOD SEED BED; APPLY LIME AND FERTILIZER, THEN RIP THE SOIL 4-6 INCHES TO MIX THE NUTRIENTS INTO THE SOIL AND TO LOOSEN AND ROUGHEN IT TO RECEIVE THE SEED.
4. **SEEDING:** APPLY SEED AT THE RECOMMENDED RATE, AND GO OVER THE SURFACE WITH A CULTIPACKER WHERE POSSIBLE TO BRING THE SEED INTO CONTACT WITH THE SOIL.
5. **MULCHING:** THE AREA SEEDED MUST BE MULCHED TO PROTECT THE BARE SOIL UNTIL THE VEGETATION IS ESTABLISHED AND TO RETAIN MOISTURE TO PROMOTE SEED GERMINATION AND PLANT GROWTH. APPLY ENOUGH MULCH TO COVER 75% OF THE SOIL SURFACE. TO KEEP IT IN PLACE AND PREVENT WIND OR WATER FROM DISLODGING IT, THE MULCH SHOULD BE HELD IN PLACE BY TACKING IT WITH ASPHALT OR COVERING IT WITH NETTING.

MAINTENANCE

AREAS MUST BE RESEEDED AND MULCHED WHERE THE VEGETATION FAILS TO ESTABLISH ITSELF OR IS DAMAGED BY RUNOFF OR CONSTRUCTION ACTIVITY. IF THE TEMPORARY VEGETATION SHOULD FAIL FOR ANY REASON BEFORE THE PERMANENT STABILIZATION IS PROVIDED, IT MUST BE REPLACED WITH AN APPROPRIATE TYPE OF COVER SUFFICIENT TO RESTRAIN EROSION.

INSTRUCTIONS FOR PERMANENT STABILIZATION USING

VEGETATION

INSTALLATION

1. REFER TO PLANS FOR LOCATION, EXTENT, AND SPECIFICATIONS. IF THERE ARE QUESTIONS OR PROBLEMS WITH THE LOCATION, EXTENT, OR METHODS OF INSTALLATION, CONTACT THE ENGINEER, ARCHITECT, OR RESPONSIBLE PERSONNEL ON THE SITE FOR ASSISTANCE. EROSION CONTROL PERSONNEL HAVE COPIES OF INSTRUCTIONS AND MAY BE ABLE TO OFFER ASSISTANCE.

   IF THE DISTURBANCE IS NOT PROPERLY STABILIZED THE FIRST TIME SO THAT EROSION IS RESTRAINED, THE SEEDING WILL HAVE TO BE REPEATED UNTIL IT IS SUCCESSFUL.

2. USE THE APPLICATION RATES FOR LIME, FERTILIZER, SEED, MULCH, ETC. SPECIFIED IN THE PLAN, OR USE THE RATES BELOW FOR THE APPROPRIATE SEASON. IF SEEDING IS TO BE DONE IN A SEASON NOT LISTED BELOW, USE VEGETATION COMPATIBLE WITH THAT SEASON OR ANOTHER METHOD OF PERMANENT STABILIZATION.
3. TALL FESCUE:

   SEEDING DATES: FEBRUARY 15 - MAY, OR AUGUST 15 - OCTOBER 15

   LIME: 135 POUNDS PER 1000 SQUARE FEET (3 TONS PER ACRE)

   FERTILIZER: 10-10-10; 23 POUNDS PER 1000 SQUARE FEET (1000 POUNDS PER ACRE). A SPLIT APPLICATION OF 500 POUNDS PER ACRE INITIALLY AND ANOTHER 500 POUNDS IN THE SPRING OR FALL IS PREFERABLE. ADD 500 POUNDS PER ACRE SUPER PHOSPHATE WHERE THE SUBSOIL IS EXPOSED.

   SEED: 1.5 POUNDS PER 1000 SQUARE FEET (60 POUNDS PER ACRE)

   MULCH: 80 POUNDS OF SMALL GRAIN STRAW PER 1000 SQUARE FEET (APPROXIMATELY 2 BALES) OR 1.5 -2 TONS PER ACRE; USE ENOUGH STRAW TO COVER 75% OF THE GROUND.

   TEMPORARY COVER: 0.5 POUNDS OF GERMAN OR BROWNTOP MILLET PER 1000 SQUARE FEET (20 POUNDS PER ACRE)

3. SEEDBED PREPARATION: REMOVE ROCKS, STUMPS, ROOTS, ETC. SINCE THEY WILL INTERFERE WITH SEEDING AND MAINTENANCE. THE SMOOTH, COMPACTED SURFACE OF CUT AND FILL SLOPES IS NOT A GOOD SEEDBED; APPLY LIME AND FERTILIZER, THEN RIP THE SOIL 4 TO 6 INCHES TO MIX THE NUTRIENTS INTO THE SOIL AND TO LOOSEN AND ROUGHEN IT TO RECEIVE THE SEED.
4. SEEDING: APPLY SEED AT THE RECOMMENDED RATE, AND GO OVER THE SURFACE WITH A CULTIPACKER WHERE POSSIBLE TO BRING THE SEED INTO CONTACT WITH THE SOIL.
5. MULCHING: THE AREA SEEDED MUST BE MULCHED TO PROTECT THE BARE SOIL UNTIL THE VEGETATION IS ESTABLISHED AND TO RETAIN MOISTURE TO PROMOTE SEED GERMINATION AND PLANT GROWTH. APPLY ENOUGH MULCH TO COVER 75% OF THE SURFACE. TO KEEP IT IN PLACE AND PREVENT WIND OR WATER FROM DISLODGING IT, THE MULCH SHOULD BE HELD IN PLACE BY TACKING IT WITH ASPHALT, CUTTING IT WITH A STRAIGHT-SET DISK, OR COVERING IT WITH NETTING.

MAINTENANCE

ANY PLACES WHERE THE VEGETATION FAILS TO ESTABLISH ITSELF OR IS DAMAGED BY RUNOFF OR CONSTRUCTION ACTIVITY MUST BE RESEEDED. WHERE THE VEGETATION FAILS TO RESTRAIN EROSION, OTHER EROSION CONTROL MEASURES MUST BE INSTALLED.

SILT FENCE

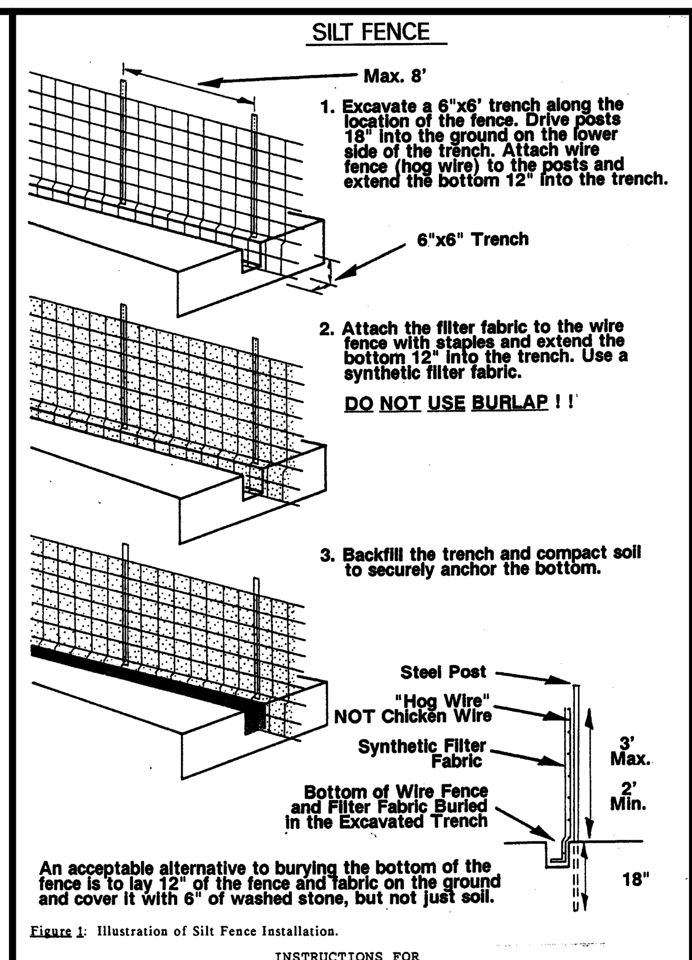

Figure 1: Illustration of Silt Fence Installation.

INSTRUCTIONS FOR

SILT FENCE

INSTALLATION

1. REFER TO THE PLANS FOR LOCATION, EXTENT, AND SPECIFICATIONS. IF THERE ARE QUESTIONS OF PROBLEMS WITH THE LOCATION, EXTENT, OR METHODS OF INSTALLATION, CONTACT THE ENGINEER, ARCHITECT, OR RESPONSIBLE PERSONNEL ON THE SITE FOR ASSISTANCE. EROSION CONTROL PERSONNEL HAVE COPIES OF INSTRUCTIONS AND MAY HAVE PHOTOGRAPHS OF PROPERLY INSTALLED SILT FENCES AS AN AID TO INSTALLATION.

   IF THE SILT FENCE IS NOT INSTALLED CORRECTLY THE FIRST TIME, IT WILL HAVE TO BE REBUILT.

2. DETERMINE THE LOCATION ON THE GROUND TAKING INTO CONSIDERATION:
   * **A SILT BARRIER (PREFABRICATED SILT FENCE) CANNOT BE SUBSTITUTED! !** THE SILT FENCE MUST BE CONSTRUCTED AS DESCRIBED IN THESE INSTRUCTIONS.
   * ALLOW SUFFICIENT SPACE FOR MAINTENANCE, GRADING, FILLING, AND OTHER CONSTRUCTION ACTIVITY BETWEEN THE SILT FENCE AND THE CONSTRUCTION SITE. IF NECESSARY, HAVE SLOPE STAKES, BUILDING CORNERS, STORM DRAINS, ETC. SURVEYED BEFORE CLEARING TO GUIDE INSTALLATION. KNOW WHERE THE TOE OF FILL SLOPES WILL EXTEND SO THAT SUFFICIENT ROOM IS LEFT BETWEEN THE TOE AND SILT FENCE FOR MAINTENANCE, REPAIR, AND REMOVAL.
   * ALLOW AT LEAST:

     15 FEET BETWEEN THE FENCE AND SINGLE-STORY BUILDINGS.

     25 FEET BETWEEN THE FENCE AND MULTIPLE-STORY BUILDINGS.

     10 FEET BETWEEN THE FENCE AND THE TOE OF FILL SLOPES.
   * WHERE POSSIBLE, INSTALL THE SILT FENCE ON THE CONTOUR SO THAT RUNOFF GOES THROUGH THE SILT FENCE AND DOES NOT FLOW ALONG THE SILT FENCE AND POND AT THE LOWEST POINT. WHERE PONDING DOES OCCUR, SILT FENCE OUTLETS MAY BE NECESSARY SO THAT THE FENCE DOES NOT COLLAPSE.
3. CLEAR THE LOCATION OF THE SILT FENCE, CLEARING ONLY WHAT IS NEEDED TO PROVIDE ACCESS TO PERSONNEL AND EQUIPMENT FOR INSTALLATION. IT IS PERMISSIBLE TO PLACE THE SILT FENCE IN THE EDGE OF EXISTING TREES AS LONG AS THE OWNER ALLOWS IT AND CARE IS TAKEN TO PROTECT THESE TREES DURING INSTALLATION, MAINTENANCE, AND REMOVAL IF THE TREES ARE TO REMAIN AFTER CONSTRUCTION. DO NOT ATTACH THE FILTER FABRIC TO THE TREES, AS IT MAKES BURYING THE TOE IMPOSSIBLE.
4. EXCAVATE A 6 X 6-INCH TRENCH ALONG THE LOCATION OF THE FENCE. USING A "DITCH WITCH" IS HELPFUL.
5. ALONG THE LOWER SIDE OF THE TRENCH, PLACE STEEL FENCE POSTS NO MORE THAN 8 FEET APART AND DRIVE THEM 18 INCHES INTO THE GROUND.
6. ATTACH WIRE FENCE ("HOG WIRE" OF MINIMUM 14 GAUGE WITH MAXIMUM MESH OF 6 INCHES) TO THE UPHILL SIDE OF THE POSTS, AND PLACE 12 INCHES OF THE BOTTOM OF THE FENCE INTO THE TRENCH. DO NOT USE "CHICKEN WIRE." USE WIRE TO FASTEN THE FENCE TO THE POSTS. THE COMPLETED FENCE MUST BE AT LEAST 2 FEET HIGH AND NOT MORE THAN 3 FEET HIGH.
7. ATTACH SYNTHETIC FILTER FABRIC TO THE UPHILL SIDE OF THE WIRE FENCE WITH STAPLES A MAXIMUM 12 INCHES APART, AND PLACE 12 INCHES OF THE FABRIC INTO THE TRENCH WITH THE WIRE FENCE. USE ROLLS OF FABRIC AND CUT TO THE NECESSARY LENGTH IN ORDER TO MINIMIZE THE NUMBER OF JOINTS.
8. BACKFILL THE TRENCH AND TAMP THE FILL TO FIRMLY ANCHOR THE BOTTOM OF THE FILTER FABRIC AND WIRE FENCE TO PREVENT WATER FROM FLOWING UNDER THE FENCE; MAKE IT GO THROUGH THE FILTER FABRIC.
9. WHERE IT IS IMPOSSIBLE TO INSTALL THE SILT FENCE ON THE CONTOUR, RUNOFF WILL FLOW ALONG THE FENCE AND POND AT THE LOWEST POINT. WHERE THE TOTAL DRAINAGE AREA TO THE POINT OF PONDING IS GREATER THAN 5,000 SQUARE FEET (FOR EXAMPLE: A SQUARE 70 FEET ON A SIDE), A SILT FENCE OUTLET IS REQUIRED; WHERE THE DRAINAGE AREA IS GREATER THAN 10,000 SQUARE FEET (FOR EXAMPLE: A SQUARE 100 FEET ON A SIDE), A SEDIMENT TRAP IS NECESSARY. THE LOCATION OF THIS OUTLET MAY BE SHOWN ON THE PLAN, BUT CHECK THE INSTALLATION IN THE FIELD WHEN THE WIRE FENCE IS UP TO DETERMINE IF ADDITIONAL OUTLETS ARE NEEDED. SEE THE DETAILS OF THE SILT FENCE OUTLET FOR INSTRUCTIONS.

MAINTENANCE

MATERIALS, EQUIPMENT, AND PERSONNEL MUST BE AVAILABLE FOR MAINTENANCE AT ALL TIMES.

1. INSPECT THE SILT FENCE:
   * DURING CONSTRUCTION: TO SEE IF MACHINERY OR FALLING TREES HAVE DAMAGED THE SILT FENCE; IF DAMAGED, REPAIR IT. TO SEE THAT FILL MATERIAL HAS NOT ACCUMULATED AGAINST THE FENCE; IF IT HAS, REMOVE THE MATERIAL, REPAIR THE FENCE, AND MOVE THE FENCE OR FILL SO THAT IT DOES NOT HAPPEN AGAIN.
   * AFTER EACH RAINFALL: TO SEE THAT RUNOFF IS NOT FLOWING UNDER THE FENCE; IF IT IS, BURY THE BOTTOM OF THE FENCE CORRECTLY. TO SEE THAT RUNOFF HAS NOT TOPPED THE FENCE IN LOW POINTS; IF IT HAS, AN OUTLET MAY BE NEEDED AT THAT POINT TO PREVENT FUTURE FAILURES.
2. CLEAN OUT ACCUMULATED SEDIMENT WHEN IT REACHES A DEPTH OF ONE-HALF THE HEIGHT OF THE FILTER FABRIC. PLACE THE SEDIMENT IN A DISPOSAL AREA OR, IF APPROPRIATE, MIX IT WITH DRY SOIL ON THE SITE.

   DO NOT DISPOSE OF SEDIMENT IN A MANNER THAT WILL CREATE AN EROSION HAZARD. DO NOT ERECT A NEW SILT FENCE ON TOP OF ACCUMULATED SEDIMENT BEHIND THE FENCE.
3. IF SILT FENCE OUTLETS ARE USED, REMOVE AND REPLACE THE STONE FILTER WITH CLEAN, WASHED STONE WHEN THE FILTER BECOMES CLOGGED. DISPOSE OF ANY CONTAMINATED STONE PROPERLY.
4. REPAIR ANY BREAKS OR ROTTEN PLACES IN THE FILTER FABRIC.
5. IF THE FENCE IS SAGGING BETWEEN POSTS, INSTALL ADDITIONAL POSTS.
6. WHEN MAKING REPAIRS, ALWAYS RESTORE THE SILT FENCE TO ITS ORIGINAL DESIGN CONFIGURATION.

REMOVAL

1. WHEN GRADING IN THE DRAINAGE AREA ABOVE THE SILT FENCE HAS BEEN FINISHED AND DISTURBED AREAS SUFFICIENTLY STABILIZED TO RESTRAIN EROSION, THE SILT FENCE AND ANY OUTLETS MUST BE REMOVED.
2. REMOVE ANY ACCUMULATED SEDIMENT AND DISPOSE OF IT PROPERLY.
3. REMOVE POSTS, FENCE, AND FABRIC; DISPOSE OF THEM PROPERLY.
4. STABILIZE THE DISTURBED AREA WHERE THE FENCE WAS LOCATED.

SILT FENCE OUTLET

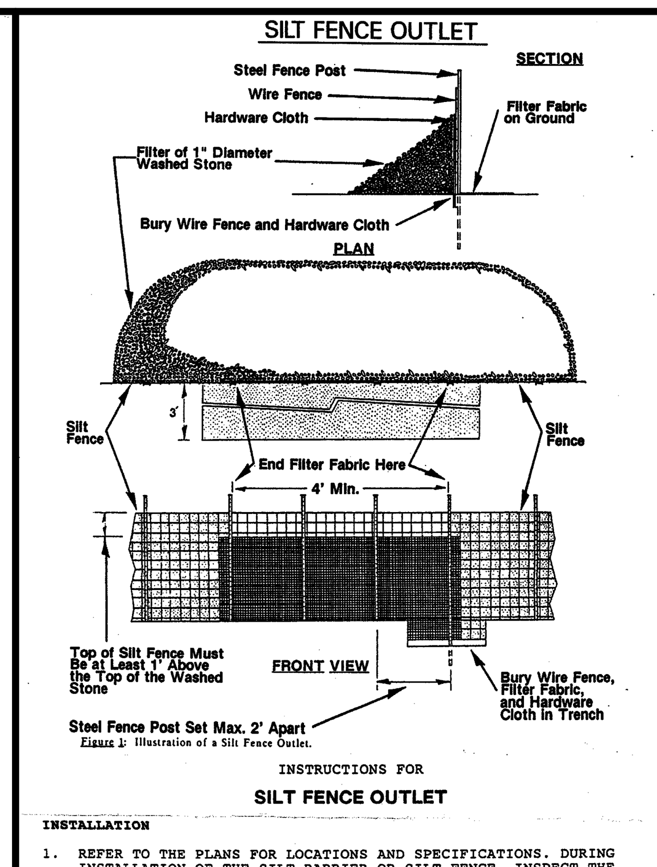

Figure 1: Illustration of a Silt Fence Outlet.

INSTRUCTIONS FOR

SILT FENCE OUTLET

INSTALLATION

1. REFER TO THE PLANS FOR LOCATIONS AND SPECIFICATIONS. DURING INSTALLATION OF THE SILT BARRIER OR SILT FENCE, INSPECT THE INSTALLATION TO DETERMINE IF OUTLETS ARE NEEDED ACCORDING TO THE CRITERIA SET FORTH IN THE SPECIFICATIONS FOR THE BARRIER AND FENCE. IF THERE ARE QUESTIONS OR PROBLEMS WITH THE LOCATION, EXTENT, OR METHOD OF INSTALLATION, CONTACT THE ENGINEER, ARCHITECT, OR RESPONSIBLE PERSONNEL ON THE SITE FOR ASSISTANCE. EROSION CONTROL PERSONNEL HAVE COPIES OF INSTRUCTIONS AND MAY HAVE PHOTOGRAPHS OF PROPERLY INSTALLED OUTLETS AS AN AID TO INSTALLATION.

   IF THE SILT FENCE OUTLET IS NOT INSTALLED CORRECTLY THE FIRST TIME, IT WILL HAVE TO BE REBUILT.

2. DETERMINE THE EXACT LOCATION OF THE OUTLET BEFORE COMPLETING INSTALLATION OF THE SILT BARRIER OR SILT FENCE, TAKING INTO CONSIDERATION:
   * INSTALL THE OUTLET AT THE LOWEST POINT(S) IN THE BARRIER OR FENCE WHERE WATER WILL POND.
   * INSTALL THE OUTLET WHERE IT IS ACCESSIBLE FOR INSTALLATION, MAINTENANCE, AND REMOVAL.
   * ALLOW AT LEAST:

     15 FEET BETWEEN THE BARRIER OR FENCE AND SINGLE-STORY BUILDINGS.

     25 FEET FOR FORK LIFTS BETWEEN THE BARRIER OR FENCE AND MULTIPLE-STORY BUILDINGS.

     10 FEET BETWEEN THE BARRIER OR FENCE AND THE TOE OF FILL SLOPES.
   * PLACE THE OUTLET SO THAT WATER FLOWING THROUGH IT WILL NOT CREATE AN EROSION HAZARD BELOW: AVOID STEEP SLOPES BELOW THE OUTLET AND AREAS WITHOUT PROTECTIVE VEGETATION. USE SLOPE DRAINS IF NECESSARY.
   * DETERMINE THE LOCATION OF THE OUTLET: FOR A SILT BARRIER, WHEN THE TRENCH IS DUG TO BURY THE BOTTOM OF THE FABRIC BECAUSE THE BARRIER WILL BE OMITTED AT THE OUTLET; FOR A SILT FENCE, WHEN THE WIRE FENCE IS IN PLACE BECAUSE THE FILTER FABRIC WILL BE OMITTED AT THE OUTLET.
3. REFER TO THE ILLUSTRATIONS OF THE OUTLET IN THE PLAN.
4. CLEAR STUMPS AND ROOTS FROM THE LOCATION OF THE OUTLET. CLEAR ADEQUATE ACCESS FOR THE EQUIPMENT NEEDED FOR INSTALLATION, MAINTENANCE, AND REMOVAL.
5. FOR A SILT BARRIER:
   * JUST BELOW THE GAP IN THE BARRIER, PLACE A LAYER OF FILTER FABRIC ON THE GROUND TO PROTECT THE SOIL FROM EROSION BY OUTFLOW FROM THE OUTLET; PLACE 6 INCHES OF THE UPPER EDGE IN THE TRENCH. STAKE THE REMAINING EDGES OF THE FABRIC TO HOLD IT IN PLACE.
   * ALONG THE GAP WHERE THE OUTLET WILL GO, PLACE STEEL FENCE POSTS FOR STRENGTH. THE POSTS MUST BE A MAXIMUM OF 2 FEET APART AND DRIVEN INTO SOLID GROUND AT LEAST 18 INCHES.
   * PLACE HARDWARE CLOTH [WELDED GALVANIZED SCREEN WITH SQUARE 1/4 - 1/2-INCH HOLES] ON THE UPHILL SIDE OF THE POSTS TO HOLD THE WASHED STONE IN PLACE. PUT 6 INCHES OF THE BOTTOM OF THE CLOTH IN THE TRENCH AND FASTEN IT TO THE POSTS WITH LENGTHS OF WIRE.
   * BURY THE BOTTOM OF THE HARDWARE CLOTH AND THE UPPER EDGE OF THE FILTER FABRIC BELOW THE OUTLET IN THE TRENCH AND COMPACT THE FILL.
   * PLACE A FILTER OF 1-INCH DIAMETER WASHED STONE ON THE UPHILL SIDE OF THE OUTLET. PILE THE STONE UP TO THE TOP OF THE HARDWARE CLOTH AND OVER THE JOINT BETWEEN THE OUTLET AND THE BARRIER.
6. FOR A SILT FENCE:
   * JUST BELOW THE GAP IN THE FENCE, PLACE A LAYER OF FILTER FABRIC ON THE GROUND TO PROTECT THE SOIL FROM EROSION BY OUTFLOW FROM THE OUTLET; PLACE 6 INCHES OF THE UPPER EDGE IN THE TRENCH. STAKE THE OTHER EDGES OF THE FABRIC TO HOLD IT IN PLACE.
   * ALONG THE GAP WHERE THE OUTLET WILL GO, PLACE ADDITIONAL STEEL FENCE POSTS FOR STRENGTH. THE POSTS MUST BE A MAXIMUM OF 2 FEET APART AND DRIVEN INTO SOLID GROUND AT LEAST 18 INCHES.
   * PLACE HARDWARE CLOTH [WELDED GALVANIZED SCREEN WITH SQUARE 1/4 - 1/2-INCH HOLES] ON THE UPHILL SIDE OF THE POSTS TO HOLD THE WASHED STONE IN PLACE. PUT 6 INCHES OF THE BOTTOM OF THE CLOTH IN THE TRENCH AND FASTEN IT TO THE POSTS WITH LENGTHS OF WIRE.
   * BURY THE BOTTOM OF THE HARDWARE CLOTH, THE UPPER EDGE OF THE FILTER FABRIC BELOW THE OUTLET, AND THE WIRE FENCE IN THE TRENCH AND COMPACT THE FILL.
   * PLACE A FILTER OF 1-INCH DIAMETER WASHED STONE ON THE UPHILL SIDE OF THE OUTLET. PILE THE STONE UP TO THE TOP OF THE HARDWARE CLOTH AND OVER THE JOINT BETWEEN THE OUTLET AND THE SILT FENCE.

MAINTENANCE

MATERIALS, EQUIPMENT, AND PERSONNEL MUST BE AVAILABLE FOR MAINTENANCE AT ALL TIME.

1. INSPECT THE SILT FENCE OUTLET:
   * DURING CONSTRUCTION: TO DETERMINE IF MACHINERY, FALLING TREES, ETC. HAVE DAMAGED THE BARRIER, FENCE, OR OUTLET; IF DAMAGED, MAKE REPAIRS. TO SEE THAT FILL MATERIAL HAS NOT ACCUMULATED AGAINST THE OUTLET, BLOCKING OUTFLOW; IF IT HAS, REMOVE THE MATERIAL, REPAIR THE DAMAGE, AND MOVE THE FENCE OR FILL SO THAT IT DOES NOT HAPPEN AGAIN.
   * AFTER EACH RAINFALL: TO DETERMINE IF RUNOFF FLOWING THROUGH THE OUTLET HAS CAUSED DAMAGE BY UNDERMINING THE FENCE OR OUTLET, OR IF ACCUMULATED WATER HAS COLLAPSED THE OUTLET; IF IT HAS, MAKE REPAIRS OR INSTALL A SEDIMENT TRAP IF NECESSARY TO PREVENT FUTURE FAILURES.
2. CLEAN OUT ACCUMULATED SEDIMENT WHEN IT REACHES A DEPTH OF ONE-HALF THE HEIGHT OF THE OUTLET. PLACE THE SEDIMENT IN A DISPOSAL AREA, OR MIX IT WITH DRY SOIL ON THE SITE IF APPROPRIATE.

   DO NOT DISPOSE OF SEDIMENT IN A MANNER THAT WILL CREATE AN EROSION HAZARD.
3. WHEN THE STONE FILTER BECOMES CLOGGED, PREVENTING FLOW THROUGH THE FILTER, REMOVE THE CONTAMINATED STONE, DISPOSE OF IT PROPERLY, AND REPLACE IT WITH CLEAN WASHED STONE.
4. REPAIR THE OUTLET IF DAMAGED BY USE OR DURING MAINTENANCE. REBUILD IT TO THE ORIGINAL CONFIGURATION.

REMOVAL

1. WHEN GRADING IN THE DRAINAGE AREA ABOVE THE OUTLET HAS BEEN COMPLETED AND THE DISTURBED AREA SUFFICIENTLY STABILIZED TO RESTRAIN EROSION, THE OUTLET MUST BE REMOVED.
2. CLEAN OUT ACCUMULATED SEDIMENT AND DISPOSE OF IT PROPERLY.
3. REMOVE POSTS, FENCE, FABRIC, WIRE, AND WASHED STONE; DISPOSE OF THEM PROPERLY.
4. GRADE THE LOCATION AS NECESSARY.
5. STABILIZE THE DISTURBED AREA WHERE THE OUTLET WAS LOCATED.

GRAVEL CONSTRUCTION EXIT

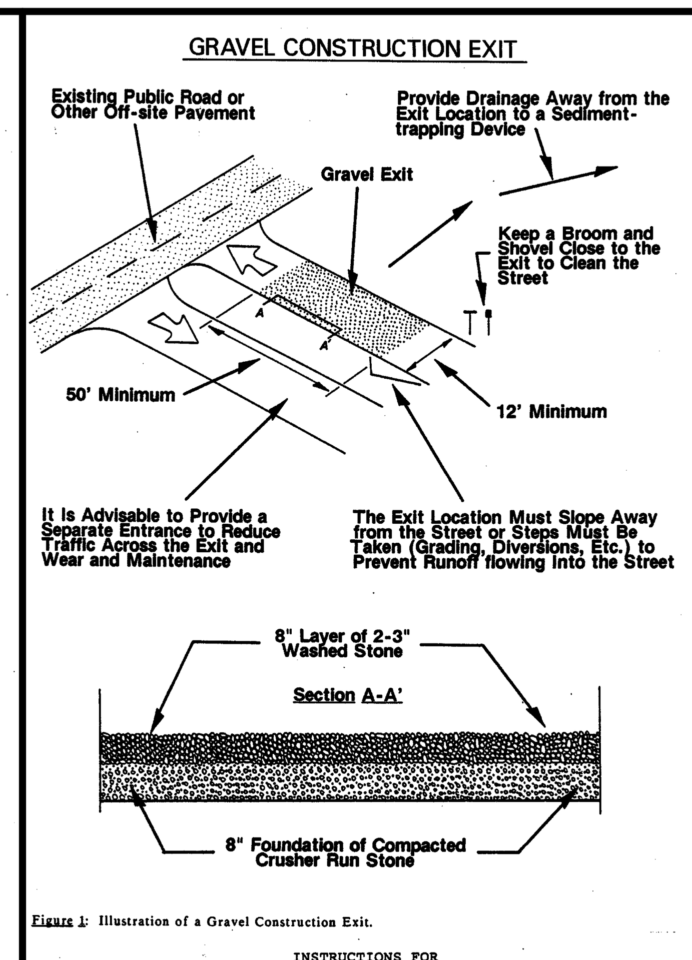

Figure 1: Illustration of a Gravel Construction Exit.

INSTRUCTIONS FOR

GRAVEL CONSTRUCTION EXIT

INSTALLATION

1. REFER TO PLANS FOR LOCATION AND SPECIFICATIONS. IF THERE ARE QUESTIONS OR PROBLEMS WITH THE LOCATION OR METHODS OF INSTALLATION CONTACT THE ENGINEER, ARCHITECT, OR RESPONSIBLE PERSONNEL ON THE SITE FOR ASSISTANCE. EROSION CONTROL PERSONNEL HAVE COPIES OF INSTRUCTIONS AND PHOTOGRAPHS OF PROPERLY INSTALLED EXITS AS AN AID TO INSTALLATION.

   IF THE CONSTRUCTION EXIT IS NOT INSTALLED CORRECTLY THE FIRST TIME, IT WILL HAVE TO BE REBUILT.

2. DETERMINE THE LOCATION ON THE GROUND, TAKING INTO CONSIDERATION:
   * THE CONSTRUCTION EXIT MUST BE IN PLACE DURING ALL PHASES OF CONSTRUCTION; IF THE LOCATION IS TO BE GRADED, THE EXIT MUST BE INSTALLED FOR THE INITIAL WORK, REMOVED TO ALLOW GRADING OF THE LOCATION, AND REPLACED IMMEDIATELY AFTER GRADING SO THAT IT IS IN PLACE AND FUNCTIONING AT ALL TIMES.
   * IF THE SITE WILL HAVE A LARGE NUMBER OF VEHICLES USING THE EXIT, IT IS ADVISABLE TO HAVE A DIVIDED ENTRANCE THAT DIRECTS ENTERING TRAFFIC THROUGH A SEPARATE TRAVELWAY PARALLEL TO THE GRAVEL CONSTRUCTION EXIT IN ORDER TO REDUCE THE NUMBER OF TRIPS OVER THE STONE, INCREASING THE LIFE OF THE GRAVEL, AND REDUCING MAINTENANCE. REFER TO THE ILLUSTRATION FOR DETAILS.
   * RUNOFF AND SEDIMENT FROM THE SITE MUST BE DIRECTED AWAY FROM THE EXIT SO THAT IT DOES NOT FLOW INTO THE STREET OR OTHER OFF-SITE AREA; CHOOSE A LOCATION FOR THE EXIT THAT WILL MAKE IT EASY TO DIVERT THE RUNOFF TO SEDIMENT-TRAPPING DEVICES.
   * IF THE GRAVEL CONSTRUCTION EXIT DOES NOT FUNCTION TO KEEP MUD AND DUST ON-SITE, THEN ANY SOIL OR DEBRIS TRACKED FROM THE SITE MUST BE PHYSICALLY REMOVED FROM THESE AREAS BY FIRST USING A SHOVEL AND BROOM AND THEN WASHING THE PAVEMENT.
   * **IF THE PERSON RESPONSIBLE FOR THE DISTURBANCE FAILS TO TAKE INITIATIVE TO KEEP SOIL AND DEBRIS ON THE SITE ENFORCEMENT ACTION MAY BE TAKEN AGAINST THE SITE AND THE GRADING PERMIT REVOKED AND/OR A STOP WORK ORDER ISSUED.**
3. CLEAR THE LOCATION OF THE EXIT, REMOVING STUMPS, ROOTS, AND OTHER VEGETATION IN ORDER TO PROVIDE A FIRM FOUNDATION SO THAT THE STONE IS NOT PRESSED INTO SOFT GROUND. CLEAR ENOUGH WIDTH TO ALLOW PASSAGE OF LARGE VEHICLES, BUT CLEAR ONLY WHAT IS NECESSARY FOR THE EXIT. DO NOT CLEAR ADJACENT AREAS UNTIL THE REQUIRED EROSION CONTROL DEVICES ARE IN PLACE.

   IF THE SOIL AT THE LOCATION IS SOFT IT IS ADVISABLE TO PLACE A 6 TO 8 INCH LAYER OF CRUSHER RUN STONE DOWN FIRST TO PROVIDE A FIRM FOUNDATION AND PREVENT THE WASHED STONE BEING PRESSED INTO THE GROUND.
4. AT THE LOCATION OF THE EXIT, PLACE AN 8-INCH LAYER OF WASHED STONE 2 TO 3 INCHES IN DIAMETER AT LEAST 50 FEET LONG AND AS WIDE AS THE FULL WIDTH OF THE EXIT OR AT LEAST 10 FEET WIDE. FLARE THE END OF THE STONE WHERE IT MEETS THE PAVEMENT SO THAT THE WHEELS OF TURNING VEHICLES REMAIN ON STONE AND DO NOT TRAVEL OVER UNPROTECTED SOIL.
5. A SQUARE-EDGED SHOVEL AND BROOM WITH STIFF BRISTLES MUST BE PROVIDED AT THE EXIT FOR REMOVING ANY MUD THAT MAY BE TRACKED INTO THE STREET.

USE

1. AS VEHICLES LEAVING THE SITE DRIVE ACROSS THE WASHED STONE THE ABRASIVE ACTION OF THE WASHED STONE SHOULD REMOVE SEDIMENT FROM THE TIRES. IT MAY BE NECESSARY TO USE A SHOVEL TO REMOVE MUD TRAPPED BETWEEN DUAL WHEELS.
2. ANY SOIL TRACKED FROM THE SITE MUST BE REMOVED IMMEDIATELY. A SHOVEL AND BROOM MUST BE USED TO REMOVE AS MUCH SOIL AS POSSIBLE BEFORE WASHING THE PAVEMENT.

MAINTENANCE

MATERIALS, EQUIPMENT, AND PERSONNEL MUST BE AVAILABLE FOR MAINTENANCE AT ALL TIMES.

1. WHEN THE STONE IN THE EXIT BECOMES CONTAMINATED WITH SOIL AND ITS FUNCTION IS REDUCED TO WHERE SEDIMENT IS BEING TRACKED INTO THE STREET, A 4-INCH LAYER OF CLEAN STONE MUST BE ADDED.
2. DIVERSIONS USED TO DIRECT RUNOFF AWAY FROM THE EXIT TO SEDIMENT-TRAPPING DEVICES MUST BE MAINTAINED ACCORDING TO SPECIFICATIONS FOR THOSE DEVICES.
3. THE GRAVEL CONSTRUCTION EXIT MUST BE MAINTAINED SO THAT MUD AND DUST ARE KEPT ON-SITE. PROBLEMS MUST BE ANTICIPATED AND PREVENTIVE MAINTENANCE MUST BE PERFORMED.

REMOVAL

1. WHEN THE GRAVEL CONSTRUCTION EXIT IS NO LONGER NEEDED, WHEN THE TRAVELWAYS HAVE BEEN STABILIZED AND THE POTENTIAL FOR TRACKING SOIL AND DEBRIS INTO THE STREET HAS BEEN REMOVED, THE GRAVEL CONSTRUCTION EXIT MAY BE REMOVED.
2. THE STONE AND ANY SEDIMENT SHOULD BE REMOVED AND PROPERLY DISPOSED OF WHERE THEY WILL NOT CREATE AN EROSION HAZARD.

BLOCK AND GRAVEL FILTER

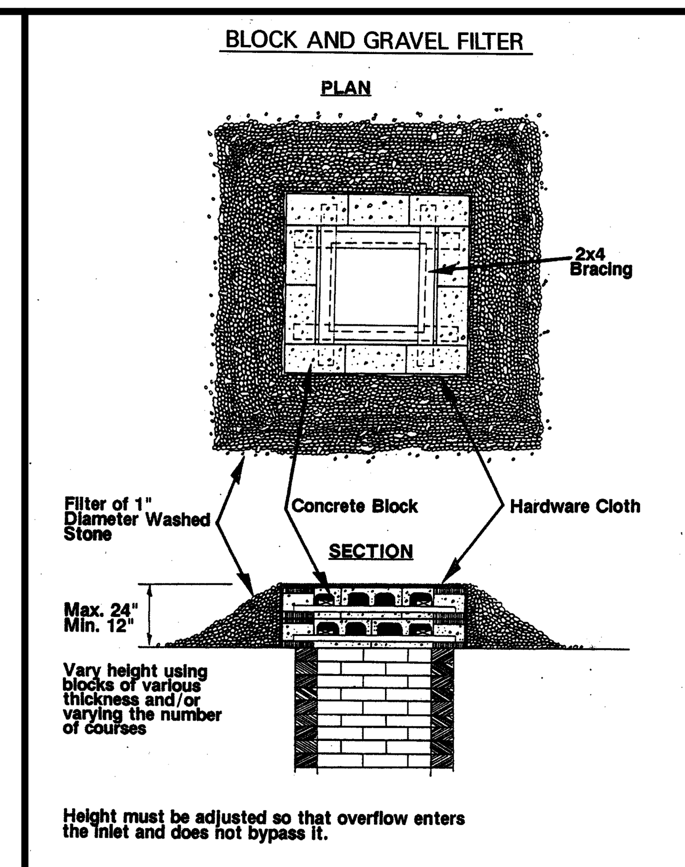

Figure 1: Illustration of a Block and Gravel Filter.

INSTRUCTIONS FOR STORM DRAIN INLET PROTECTION USING A

BLOCK AND GRAVEL FILTER

INSTALLATION

1. REFER TO THE PLANS FOR LOCATIONS AND SPECIFICATIONS. IF THERE ARE QUESTIONS OR PROBLEMS WITH THE LOCATION OR METHODS OF INSTALLATION, CONTACT THE ENGINEER, ARCHITECT, OR RESPONSIBLE PERSONNEL ON THE SITE FOR ASSISTANCE. EROSION CONTROL PERSONNEL HAVE COPIES OF INSTRUCTIONS AND MAY HAVE PHOTOGRAPHS OF PROPERLY INSTALLED BLOCK AND GRAVEL FILTERS AS AN AID TO INSTALLATION.

   IF THE INLET PROTECTION IS NOT INSTALLED CORRECTLY THE FIRST TIME, IT WILL HAVE TO BE REBUILT.

2. DETERMINE THE LOCATION ON THE GROUND, TAKING INTO CONSIDERATION:
   * DIVERSIONS AND/OR BERMS MUST BE USED TO FORCE RUNOFF THROUGH THE FILTER INTO THE INLET SO THAT IT DOES NOT BY-PASS THE INLET AND CAUSE PROBLEMS ELSEWHERE.
   * IF THE INLET IS TO BE RAISED IN STAGES AS THE FILL IS BROUGHT UP AROUND IT, THE FILTER MUST BE REMOVED FOR GRADING AND REPLACED IMMEDIATELY SO THAT THE INLET IS ALWAYS PROTECTED FROM THE ENTRY OF UNFILTERED RUNOFF.
3. REFER TO ILLUSTRATIONS IN THE PLAN TO ASSIST INSTALLATION.
4. PLACE CONCRETE BLOCKS AROUND THE OPENING OF THE INLET WITH THE HOLES IN THE BLOCK PARALLEL TO THE GROUND SO THAT WATER CAN FLOW THROUGH THE HOLES. VARY THE NUMBER OF COURSES TO BUILD THE FILTER TO THE REQUIRED HEIGHT. IT MUST BE AT LEAST 12 INCHES HIGH.
5. INSTALL 2 X 4'S AS SHOWN IN THE ILLUSTRATION FOR REINFORCEMENT.
6. WRAP HARDWARE CLOTH AROUND THE OUTSIDE OF THE BLOCKS AND ON THE GROUND. HARDWARE CLOTH IS WELDED, GALVANIZED WIRE FABRIC WITH 1/4 - 1/2-INCH SQUARE HOLES.
7. PILE CLEAN WASHED STONE (1-INCH DIAMETER) AROUND THE OUTSIDE OF THE BLOCKS AND ON TOP OF THE HARDWARE CLOTH.
8. WHERE POSSIBLE, DIG A SMALL PIT AROUND THE FILTER TO STORE SEDIMENT.
9. IT IS ADVISABLE TO PLACE GUARD STAKES AROUND THE FILTER TO ALERT MACHINERY OPERATORS OF ITS LOCATION AND PREVENT DAMAGE TO IT.
10. DIVERSIONS AND/OR BERMS MUST BE USED TO DIRECT RUNOFF TO THE FILTER AND INTO THE INLET. RUNOFF MUST NOT BE ALLOWED TO BY-PASS THE INLET AS IT WILL CREATE PROBLEMS DOWNHILL. REFER TO SPECIFIC DETAILS IN THE PLAN.

MAINTENANCE

MATERIALS, EQUIPMENT, AND PERSONNEL MUST BE AVAILABLE FOR MAINTENANCE AT ALL TIMES.

1. INSPECT THE BLOCK AND GRAVEL FILTER:
   * DURING CONSTRUCTION: TO SEE IF MACHINERY OR CONSTRUCTION ACTIVITY HAVE DAMAGED THE FILTER; IF DAMAGED, REPAIR IT. TO SEE IF CONSTRUCTION TRAFFIC HAS DAMAGED OR REDUCED THE CAPACITY OF THE BERMS AND DIVERSIONS DIRECTING RUNOFF TO THE FILTER; IF SO, MAKE REPAIRS.
   * AFTER EACH RAINFALL: TO SEE IF RUNOFF IS BY-PASSING THE INLET OR TOPPING THE BERMS OR DIVERSIONS BELOW THE FILTER; IF SO, INCREASE THEIR CAPACITY TO PREVENT IT.
2. WHEN THE STONE FILTER BECOMES COVERED WITH SEDIMENT AND CLOGGED SO THAT RUNOFF CANNOT FLOW THROUGH IT, THE CONTAMINATED STONE MUST BE REMOVED, DISPOSED OF PROPERLY, AND REPLACED WITH CLEAN WASHED STONE.

   DO NOT DISPOSE OF SEDIMENT IN A MANNER THAT WILL CREATE AN EROSION HAZARD.
3. IF THE FILTER IS DAMAGED, IF THE BLOCKS ARE DISLOCATED OR BROKEN, OR IF THE REINFORCEMENT IS DAMAGED, REBUILD THE FILTER TO ITS ORIGINAL DESIGN CONFIGURATION.

REMOVAL

1. WHEN GRADING IN THE DRAINAGE AREA ABOVE THE INLET HAS BEEN FINISHED AND THE DISTURBED AREAS STABILIZED, THE BLOCK AND GRAVEL FILTER MUST BE REMOVED.
2. REMOVE ANY ACCUMULATED SEDIMENT AND DISPOSE OF IT PROPERLY.
3. REMOVE THE STONE, HARDWARE CLOTH, BLOCK, AND 2 X 4'S, AND DISPOSE OF THEM PROPERLY.
4. STABILIZE THE DISTURBED AREA AS REQUIRED.

DIVERSION DIKE

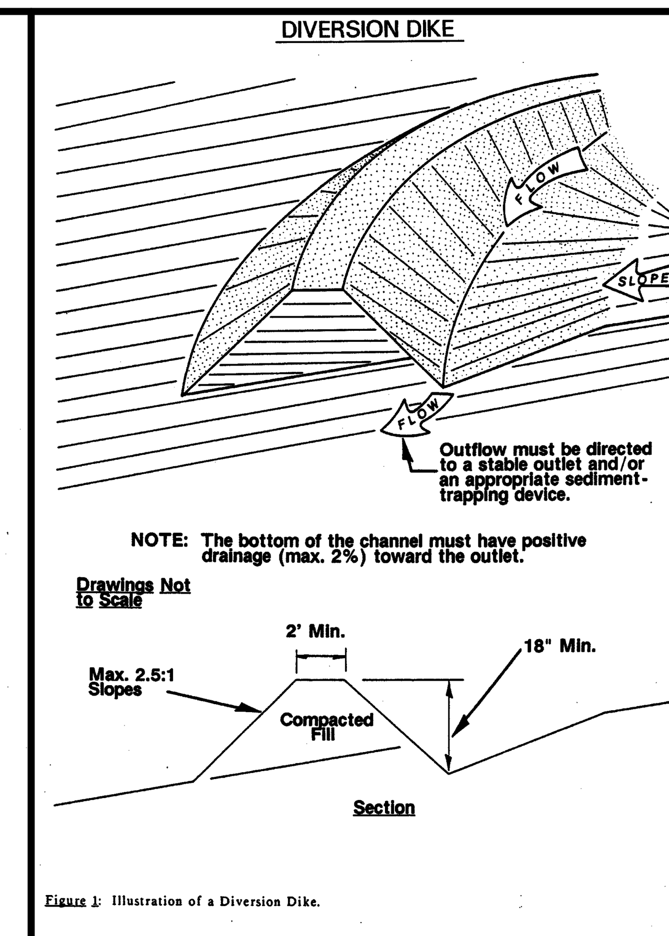

Figure 1: Illustration of a Diversion Dike.

INSTRUCTIONS FOR

DIVERSION DIKE

INSTALLATION

1. REFER TO PLANS FOR LOCATION, EXTENT, AND SPECIFICATIONS. IF THERE ARE QUESTIONS OR PROBLEMS WITH THE LOCATION, EXTENT, OR METHODS OF INSTALLATION, CONTACT THE ENGINEER, ARCHITECT, OR RESPONSIBLE PERSONNEL ON THE SITE FOR ASSISTANCE. EROSION CONTROL PERSONNEL HAVE COPIES OF INSTRUCTIONS AND MAY HAVE PHOTOGRAPHS OF PROPERLY INSTALLED DIVERSIONS AS AN AID TO INSTALLATION.

   IF THE DIVERSION DIKE IS NOT INSTALLED CORRECTLY THE FIRST TIME IT WILL HAVE TO BE REPLACED.

2. DETERMINE THE LOCATION ON THE GROUND TAKING INTO CONSIDERATION:
   * CONSIDER THE LOCATIONS OF THE SEDIMENT-TRAPPING DEVICES (SEDIMENT TRAP OR POND) WHEN LOCATING AND BUILDING THE DIVERSION. THE DIVERSION MUST DRAIN TO THE DEVICES.
   * THE DIVERSION MUST HAVE POSITIVE DRAINAGE TO THE SEDIMENT-TRAPPING DEVICES. THE MAXIMUM GRADE IS 2%.
   * ALLOW SUFFICIENT SPACE FOR MAINTENANCE AND REMOVAL BETWEEN THE TOE OF THE FILL SLOPE AND THE DIVERSION. IF NECESSARY, HAVE SLOPES STAKES, BUILDING CORNERS, STORM DRAINS, ETC. SURVEYED BEFORE CLEARING TO GUIDE INSTALLATION.
3. CLEAR THE LOCATION FOR THE DIVERSION, CLEARING ONLY WHAT IS NEEDED TO PROVIDE ACCESS FOR PERSONNEL AND EQUIPMENT FOR INSTALLATION. DO NOT CLEAR THE DRAINAGE AREA ABOVE UNTIL THE DIVERSION AND SEDIMENT-TRAPPING DEVICES ARE IN PLACE.
4. REMOVE ROOTS, STUMPS, AND OTHER DEBRIS AND DISPOSE OF THEM PROPERLY. **DO NOT USE DEBRIS TO BUILD THE DIKE.**
5. GRADE THE CHANNEL AND BUILD THE RIDGE; COMPACT THE FILL. THE SIDES OF THE CHANNEL AND THE BACK OF THE RIDGE MUST BE NO STEEPER THAN A 3:1 SLOPE. THE COMPLETED DIVERSION MUST BE AT LEAST 18 INCHES DEEP, MEASURED FROM THE BOTTOM OF THE CHANNEL TO THE TOP OF THE RIDGE.
6. CHECK THE BOTTOM OF THE CHANNEL TO ENSURE POSITIVE DRAINAGE IN THE DESIRED DIRECTION.

MAINTENANCE

MATERIALS, EQUIPMENT, AND PERSONNEL MUST BE AVAILABLE FOR MAINTENANCE AT ALL TIMES.

1. INSPECT THE DIVERSION DIKE:
   * DURING CONSTRUCTION: TO SEE IF MACHINERY, FALLING TREES, ETC. HAVE DAMAGED THE DIKE; IF DAMAGED, MAKE REPAIRS. TO SEE THAT FILL MATERIAL HAS NOT BLOCKED THE CHANNEL; IF IT HAS, REMOVE THE FILL TO CLEAR IT.
   * AFTER EACH RAINFALL: TO SEE THAT RUNOFF IS FLOWING TO THE SEDIMENT-TRAPPING DEVICES; IF NOT, CHANGE THE GRADE SO THAT IT WILL.
2. IF SEDIMENT ACCUMULATES IN THE CHANNEL, REMOVE IT SO THAT ITS CAPACITY IS NOT REDUCED, CAUSING IT TO FAIL.

   DO NOT DISPOSE OF THE SEDIMENT IN A MANNER THAT WILL CREATE AN EROSION HAZARD.
3. REPAIR ANY PLACES IN THE RIDGE THAT ARE WEAKENED AND WHICH THREATEN TO CAUSE FAILURE OF THE DIVERSION.

REMOVAL

1. WHEN THE GRADING ABOVE THE DIVERSION IS FINISHED AND THE AREA IS STABILIZED, IT MUST BE REMOVED.
2. REMOVE ACCUMULATED SEDIMENT AND DISPOSE OF IT PROPERLY.
3. GRADE THE AREA AND SMOOTH IT OUT IN PREPARATION FOR STABILIZATION.
4. STABILIZE THE AREA AS SPECIFIED IN THE PLAN.

SEDIMENT POND

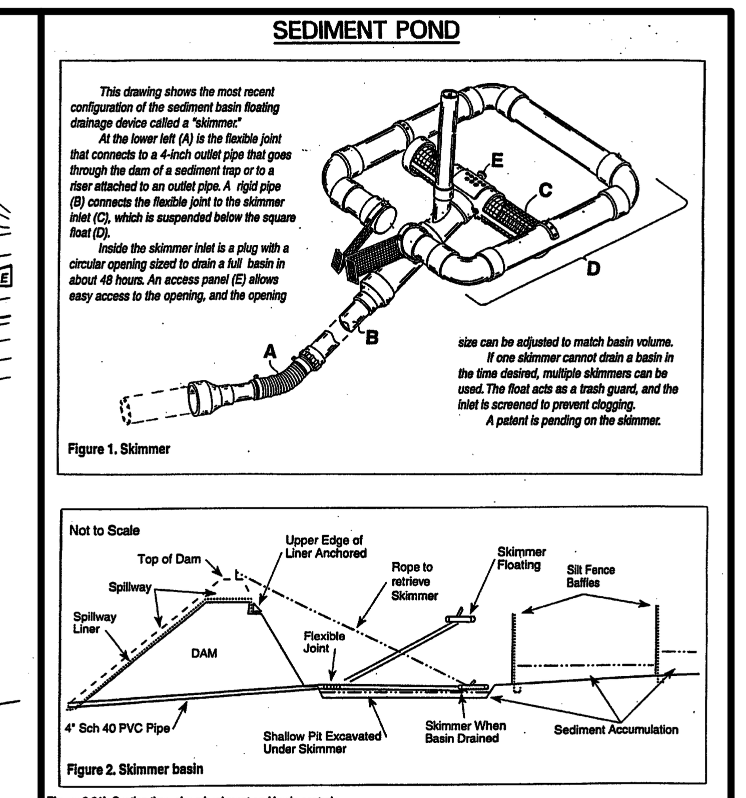

Figure 6.61b Section through embankment and basin controls.

Construction Specifications

1. Site preparations—Clear, grub, and strip topsoil from areas under the embankment to remove trees, vegetation, roots, and other objectionable material. To facilitate sediment cleanout and restoration, clear the pool area of all brush, trees, and other objectionable materials. Stockpile all topsoil or soil containing organic matter for use on the outer shell of the embankment to facilitate vegetative establishment. Place temporary sediment control measures below the basin as needed.

2. Cut-off trench—Excavate a cut-off trench along the centerline of the earth fill embankment. Cut the trench to stable soil material, but in no case make it less than 2 ft deep. The cut-off trench must extend into both abutments to at least the elevation of the riser crest. Make the minimum bottom width wide enough to permit operation of excavation and compaction equipment but in no case less than 2 ft. Make side slopes of the trench no steeper than 1:1. Compaction requirements are the same as those for the embankment. Keep the trench dry during backfilling and compaction operations.

3. Embankment—Take fill material from the approved areas shown on the plans. It should be clean mineral soil, free of roots, woody vegetation, rocks, and other objectionable material. Scarify areas on which fill is to be placed before placing fill. The fill material must contain sufficient moisture so it can be formed by hand into a ball without crumbling. If water can be squeezed out of the ball, it is too wet for proper compaction. Place fill material in 6 to 8-inch continuous layers over the entire length of the fill area and then compact it. Compaction may be obtained by routing the construction hauling equipment over the fill so that the entire surface of each layer is traversed by at least one wheel or tread track of the heavy equipment, or a compactor may be used. Construct the embankment to an elevation 10% higher than the design height to allow for settling.

4. Skimmer installation–Install floating skimmer as shown in the section above.

5. Emergency spillway—Install the emergency spillway in undisturbed soil. The achievement of planned elevations, grade, design width, and entrance and exit channel slopes are critical to the successful operation of the emergency spillway.

6. Inlets—Discharge water into the basin in a manner to prevent erosion. Use diversions with outlet protection to divert sediment-laden water to the upper end of the pool area to improve basin trap efficiency (*References: Runoff Control Measures* and *Outlet Protection*).

7. Erosion control—Construct the structure so that the disturbed area is minimized. Divert surface water away from bare areas. Complete the embankment before the area is cleared. Stabilize the emergency spillway embankment and all other disturbed areas above the crest of the principal spillway immediately after construction (*References: Surface Stabilization*).

8. Safety—Sediment basins may attract children and can be dangerous. Avoid steep side slopes, and fence and mark basins with warning signs if trespassing is likely. Follow all state and local requirements.

Maintenance

Check sediment basins after periods of significant runoff. Remove sediment and restore the basin to its original dimensions when sediment accumulates to one-half the design depth.

Check the embankment, spillways, and outlet for erosion damage, and inspect the embankment for piping and settlement. Make all necessary repairs immediately. Remove all trash and other debris from the riser and pool area.

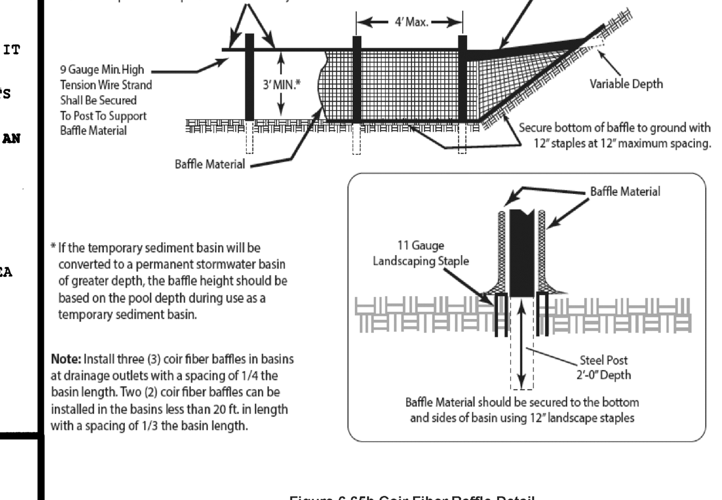

* If the temporary sediment basin will be converted to a permanent stormwater basin of greater depth, the baffle height should be based on the pool depth during use as a temporary sediment basin.

Note: Install three (3) coir fiber baffles in basins at drainage outlets with a spacing of 1/4 the basin length. Two (2) coir fiber baffles can be installed in the basins less than 20 ft. in length with a spacing of 1/3 the basin length.

Figure 6.65b Coir Fiber Baffle Detail
Cross section of a porous baffle in a sediment basin.

TREE PROTECTION FENCE

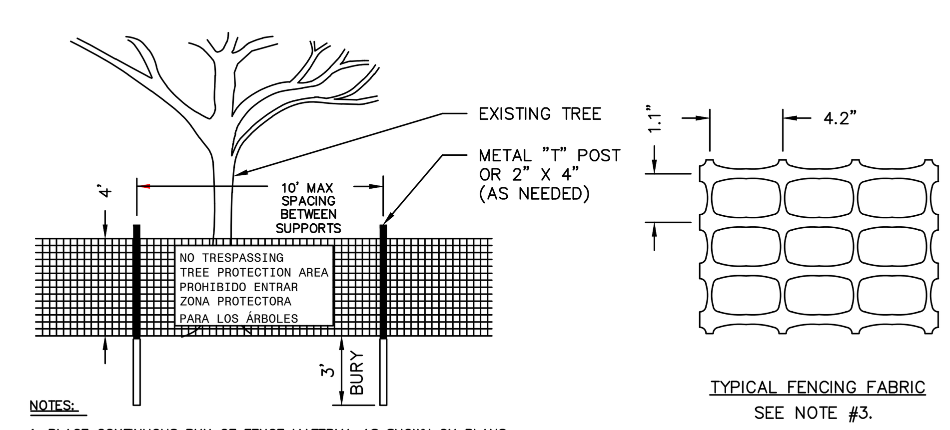

NOTES:

1. PLACE CONTINUOUS RUN OF FENCE MATERIAL AS SHOWN ON PLANS.
2. ATTACH AT 10' MAXIMUM INTERVALS TO 2x4 POSTS. DO NOT STAPLE TO TREES.
3. FENCE MATERIAL SHALL BE 'TENSAR' HIGH STRENGTH POLYMER GEOGRID FABRIC BY TENSAR CORPORATION, MORROW, GEORGIA, OR EQUAL, BRIGHT ORANGE COLOR.
4. AT 100' O.C., PLACE SIGNS IN ENGLISH AND SPANISH: "NO TRESPASSING – TREE PROTECTION AREA" and "PROHIBIDO ENTRAR – ZONA PROTECTORA PARA LOS ARBOLES"
5. A PRE-CONSTRUCTION CONFERENCE SHALL BE HELD WITH THE PROJECT MANAGER AND THE TOWN'S LANDSCAPE ARCHITECT BEFORE ANY SITE WORK BEGINS.
6. ANY TREE ROOTS EXPOSED BY CONSTRUCTION SHALL BE SEVERED CLEANLY WITH A PRUNING TOOL.
7. THE SOIL WITHIN THE PROTECTED AREA AROUND EXISTING TREES SHALL NOT BE DRIVEN UPON AFTER FENCE REMOVAL FOR THE PURPOSE OF INSTALLING LANDSCAPING.

TREE PROTECTION FENCE
NOT TO SCALE

COIR FIBER WATTLE DETAIL

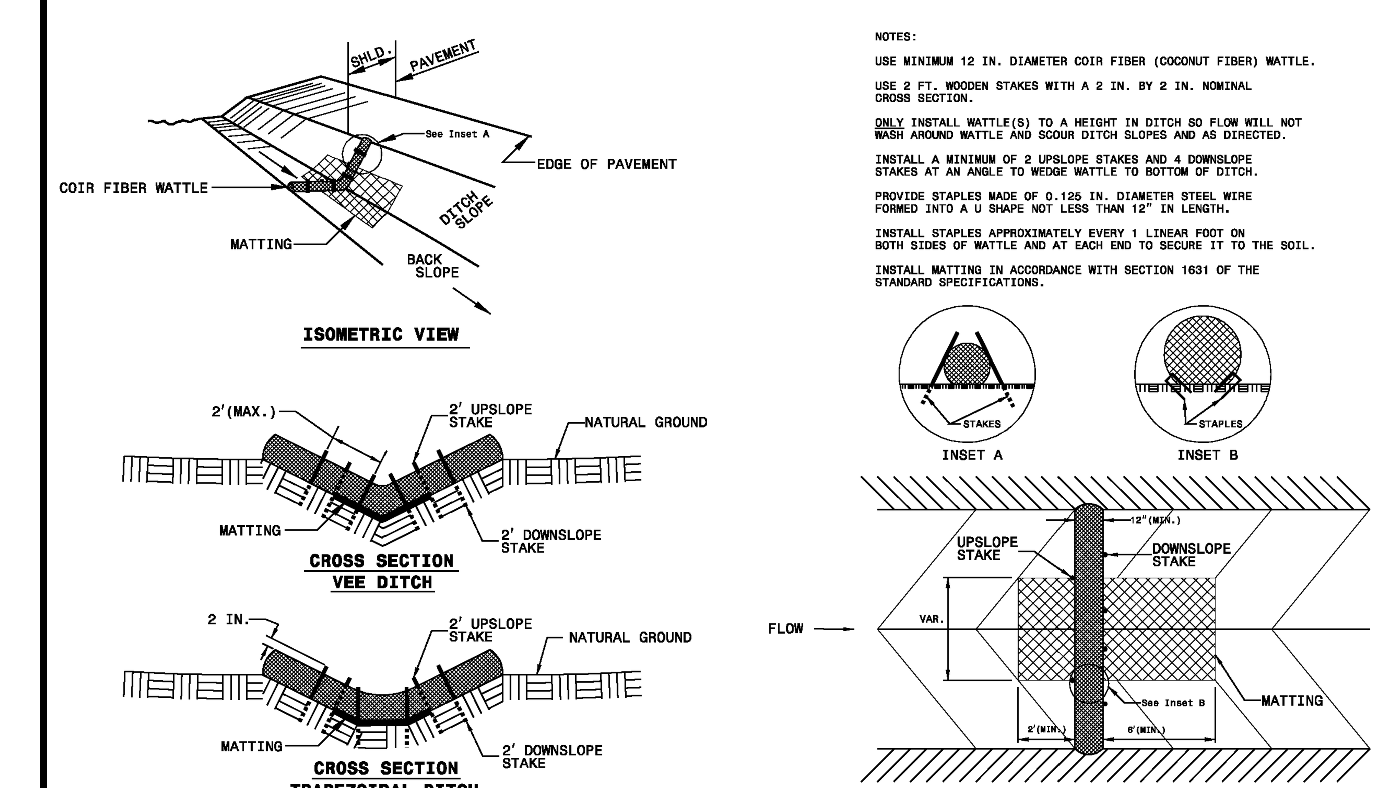

NOTES:

USE MINIMUM 12 IN. DIAMETER COIR FIBER (COCONUT FIBER) WATTLE.

USE 2 FT. WOODEN STAKES WITH A 2 IN. BY 2 IN. NOMINAL CROSS SECTION.

ONLY INSTALL WATTLE(S) TO A HEIGHT IN DITCH SO FLOW WILL NOT WASH AROUND WATTLE AND SCOUR DITCH SLOPES AND AS DIRECTED.

INSTALL A MINIMUM OF 2 UPSLOPE STAKES AND 4 DOWNSLOPE STAKES AT AN ANGLE TO WEDGE WATTLE TO BOTTOM OF DITCH.

PROVIDE STAPLES MADE OF 0.125 IN. DIAMETER STEEL WIRE FORMED INTO A U SHAPE NOT LESS THAN 12" IN LENGTH.

INSTALL STAPLES APPROXIMATELY EVERY 1 LINEAR FOOT ON BOTH SIDES OF WATTLE AND AT EACH END TO SECURE IT TO THE SOIL.

INSTALL MATTING IN ACCORDANCE WITH SECTION 1631 OF THE STANDARD SPECIFICATIONS.

PHILIP POST & ASSOCIATES
A Division of Pennoni
Firm License F-1267
PENNONI ASSOCIATES INC.
401 Providence Road #200
Chapel Hill, NC 27514
T 919.929.1173 F 919.493.6548

ALL DIMENSIONS MUST BE VERIFIED BY CONTRACTOR AND OWNER MUST BE NOTIFIED OF ANY DISCREPANCIES BEFORE PROCEEDING WITH WORK

NOT FOR CONSTRUCTION

NORTH CAROLINA PROFESSIONAL ENGINEER SEAL 030517 TIMOTHY A. SMITH

HILLSTONE CHAPEL HILL
1730 FORDHAM BLVD.
CHAPEL HILL, NORTH CAROLINA 27514

EROSION AND SEDIMENTATION CONTROL DETAILS

LEON CAPITAL GROUP
5970 FAIRVIEW ROAD, SUITE 450
CHARLOTTE, NORTH CAROLINA 28210

DATE	NO.	REVISIONS	BY
7/31/2017	4	TOWN COMMENT REVISIONS REVIEW #4	WRA
6/15/2017	3	TOWN COMMENT REVISIONS REVIEW #3	WRA
4/7/2017	2	TOWN COMMENT REVISIONS REVIEW #2	WRA
2/20/2017	1	REVISIONS PER TOWN'S REVIEW COMMENTS	WRA

ALL DOCUMENTS PREPARED BY PENNONI ASSOCIATES ARE INSTRUMENTS OF SERVICE IN RESPECT OF THE PROJECT. THEY ARE NOT INTENDED OR REPRESENTED TO BE SUITABLE FOR REUSE BY OWNER OR OTHERS ON THE EXTENSIONS OF THE PROJECT OR ON ANY OTHER PROJECT. ANY REUSE WITHOUT WRITTEN VERIFICATION OR ADAPTATION BY PENNONI ASSOCIATES FOR THE SPECIFIC PURPOSE INTENDED WILL BE AT OWNERS SOLE RISK AND WITHOUT LIABILITY OR LEGAL EXPOSURE TO PENNONI ASSOCIATES; AND OWNER SHALL INDEMNIFY AND HOLD HARMLESS PENNONI ASSOCIATES FROM ALL CLAIMS, DAMAGES, LOSSES AND EXPENSES ARISING OUT OF OR RESULTING THEREFROM.

PROJECT	LCGR1602
DATE	DECEMBER 7, 2016
DRAWING SCALE	AS SHOWN
DRAWN BY	WRA
APPROVED BY	TAS

CS8501

PROJECT STATUS: DESIGN DEVELOPMENT
PLOTSTYLE: Pennoni NCS.stb