NOT USED

SCALE: 1/16" = 1'-0" | 8

BLDG 2 - REAR/SOUTH ELEVATION COURTYARD

SCALE: 1/16" = 1'-0" | 7

BLDG 2 - REAR/SOUTH ELEVATION

SCALE: 1/16" = 1'-0" | 3

BLDG 2 - WEST ELEVATION COURYARD (FACING RAMS PLAZA & BLDG 1)

SCALE: 1/16" = 1'-0" | 6

BLDG 2 - WEST ELEVATION (FACING RAMS PLAZA & BLDG 1)

SCALE: 1/16" = 1'-0" | 2

NOT USED

SCALE: 1/16" = 1'-0" | 5

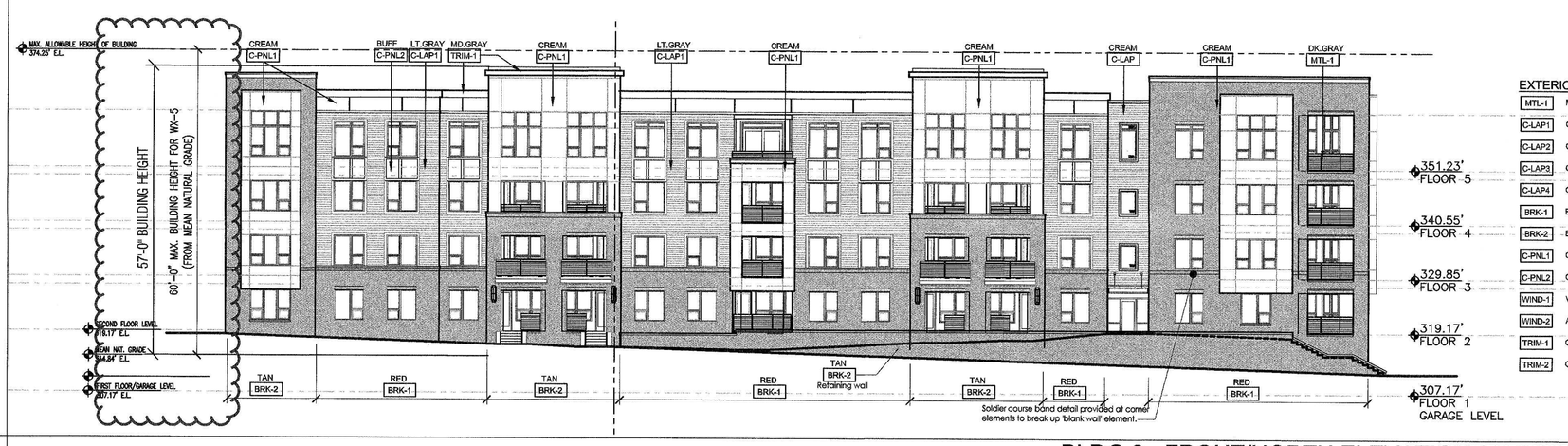

EXTERIOR FINISH LEGEND:

MTL-1	MISCELLANEOUS METAL - "DARK GRAY"
C-LAP1	CEMENTITIOUS LAP SIDING - "LIGHT GRAY"
C-LAP2	CEMENTITIOUS LAP SIDING - "COOL GRAY"
C-LAP3	CEMENTITIOUS LAP SIDING - "BUFF"
C-LAP4	CEMENTITIOUS LAP SIDING - "DARK GRAY"
BRK-1	BRICK VENEER - "RED"
BRK-2	BRICK VENEER - "TAN"
C-PNL1	CEMENTITIOUS PANEL -"CREAM"
C-PNL2	CEMENTITIOUS PANEL -"BUFF"
WIND-1	VINYL CLAD WINDOWS - "TAN"
WIND-2	ALUMINUM STOREFRONT - TAN
TRIM-1	CORNICE TRIM - "MEDIUM GRAY"
TRIM-2	CORNICE TRIM - "CREAM"

BLDG 2 - FRONT/NORTH ELEVATION (FACING NEW ROAD)

SCALE: 1/16" = 1'-0" | 1

©2017 DAVIS ARCHITECTS EXPRESSLY RESERVES ITS COMMON LAW COPYRIGHT AND OTHER PROPERTY RIGHTS IN THESE PLANS. THESE PLANS ARE NOT TO BE REPRODUCED, CHANGED OR COPIED IN ANY FORM OR MANNER WHATSOEVER, NOR ARE THEY TO BE ASSIGNED TO ANY THIRD PARTY WITHOUT FIRST OBTAINING THE EXPRESSED WRITTEN PERMISSION AND CONSENT OF JDAVIS ARCHITECTS, PLLC

JDAVIS
510 South Wilmington St. | Raleigh, NC 27601 | tel 919.835.1500
1518 Walnut St. Suite 1308 | Philadelphia, PA 19102 | tel 215.545.0121

LEON Capital Group

Leon Capital Group
Hillstone - Building 2
Chapel Hill, North Carolina

FOR REFERENCE ONLY

J. DAVIS ARCHITECTS, PLLC REGISTERED PROFESSIONAL ENGINEER SEAL CERT. NO. 51200 RALEIGH, N.C.

		DATE
PROJECT:	16025	
ISSUE:	SCHEMATIC DESIGN	.
	FDP-S SUBMITTAL	08.07.17
	DESIGN DEVELOPMENT	02.20.17
	DECK-FTN PERMIT SET	04.21.17
	50% CD SET	05.17.17
REVISIONS:	PERMIT SET	. .
	.	. .
	.	. .
	.	. .
	.	. .
	.	. .
DRAWN BY:	.	
CHECKED BY:	.	
CONTENT:	BUILDING 2 ELEVATIONS	

GA3.02a

6/14/2017 4:53 PM 16proj\16025_Hillstone Chapel Hill_Output\FDP Submittal 05-14-17\GA3.02a-b.dwg

NOT USED

SCALE: 1/16" = 1'-0"

8

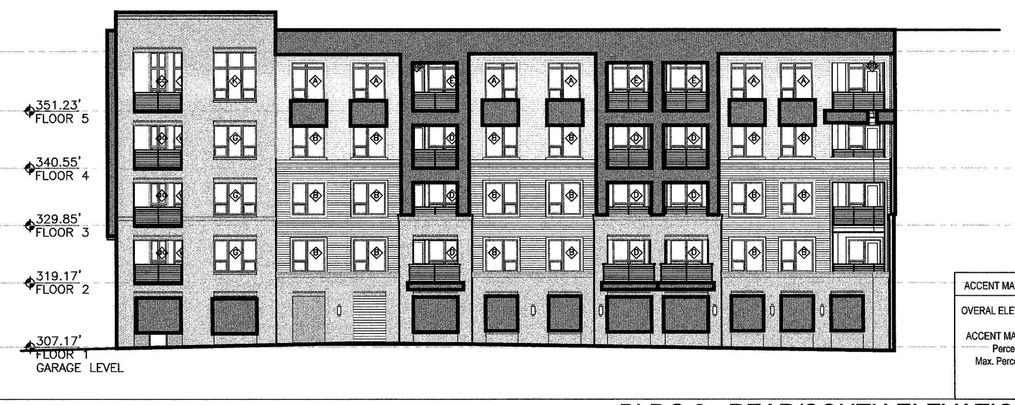

BLDG 2 - REAR/SOUTH ELEVATION COURTYARD

SCALE: 1/16" = 1'-0"

7

BLDG 2 - WEST ELEVATION COURYARD (FACING RAMS PLAZA & BLDG 1)

SCALE: 1/16" = 1'-0"

6

NOT USED

SCALE: 1/16" = 1'-0"

5

BLDG 2 - EAST ELEVATION (FACING LEGION ROAD)

SCALE: 1/16" = 1'-0"

4

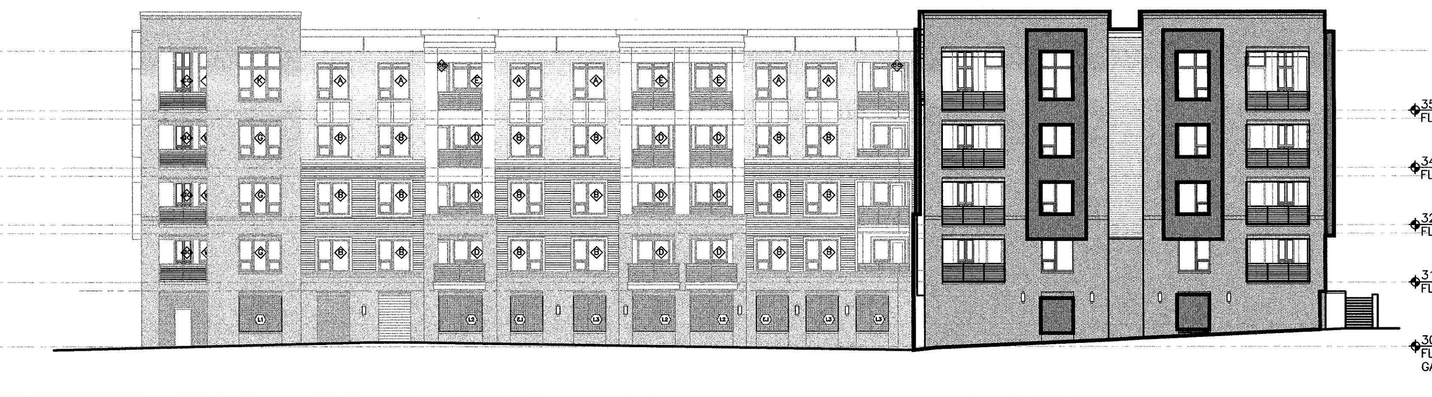

BLDG 2 - REAR/SOUTH ELEVATION

SCALE: 1/16" = 1'-0"

3

ACCENT MATERIAL CALCULATION

BLDG 2 - WEST ELEVATION (FACING RAMS PLAZA & BLDG 1)

SCALE: 1/16" = 1'-0"

2

BLDG 2 - FRONT/NORTH ELEVATION (FACING NEW ROAD)

SCALE: 1/16" = 1'-0"

1

©2017 JDAVIS ARCHITECTS EXPRESSLY RESERVES ITS COMMON LAW COPYRIGHT AND OTHER PROPERTY RIGHTS IN THESE PLANS. THESE PLANS ARE NOT TO BE REPRODUCED, CHANGED OR COPIED IN ANY FORM OR MANNER WHATSOEVER, NOR ARE THEY TO BE ASSIGNED TO ANY THIRD PARTY WITHOUT FIRST OBTAINING THE EXPRESSED WRITTEN PERMISSION AND CONSENT OF JDAVIS ARCHITECTS, PLLC

JDAVIS
510 South Wilmington St. | Raleigh, NC 27601 | tel 919.835.1500
1518 Walnut St. Suite 1308 | Philadelphia, PA 19102 | tel 215.545.0121

LEON Capital Group

Leon Capital Group
Hillstone - Building 2
Chapel Hill, North Carolina

FOR REFERENCE ONLY

J. DAVIS ARCHITECTS, PLLC
CERT. NO. 51208
NORTH CAROLINA
RALEIGH, N.C.

		DATE
PROJECT:	16025	
ISSUE:	SCHEMATIC DESIGN	.
	FDP-5 SUBMITTAL	08.07.17
	DESIGN DEVELOPMENT	02.20.17
	DECK-FTN PERMIT SET	04.21.17
	50% CD SET	05.17.17
REVISIONS:	PERMIT SET	.
	.	.
	.	.
	.	.
	.	.
	.	.
	.	.
DRAWN BY:	.	
CHECKED BY:	.	
CONTENT:	BUILDING 2 ELEVATIONS	
	ACCENT MATERIAL CALCULATIONS	
	.	
	.	

GA3.02b

6/14/2017 4:53 PM \\Rpcnj\16025_Hillstone Chapel Hill\7_Output\DRP Submittal 06-14-17\GA3.02b-b.dwg

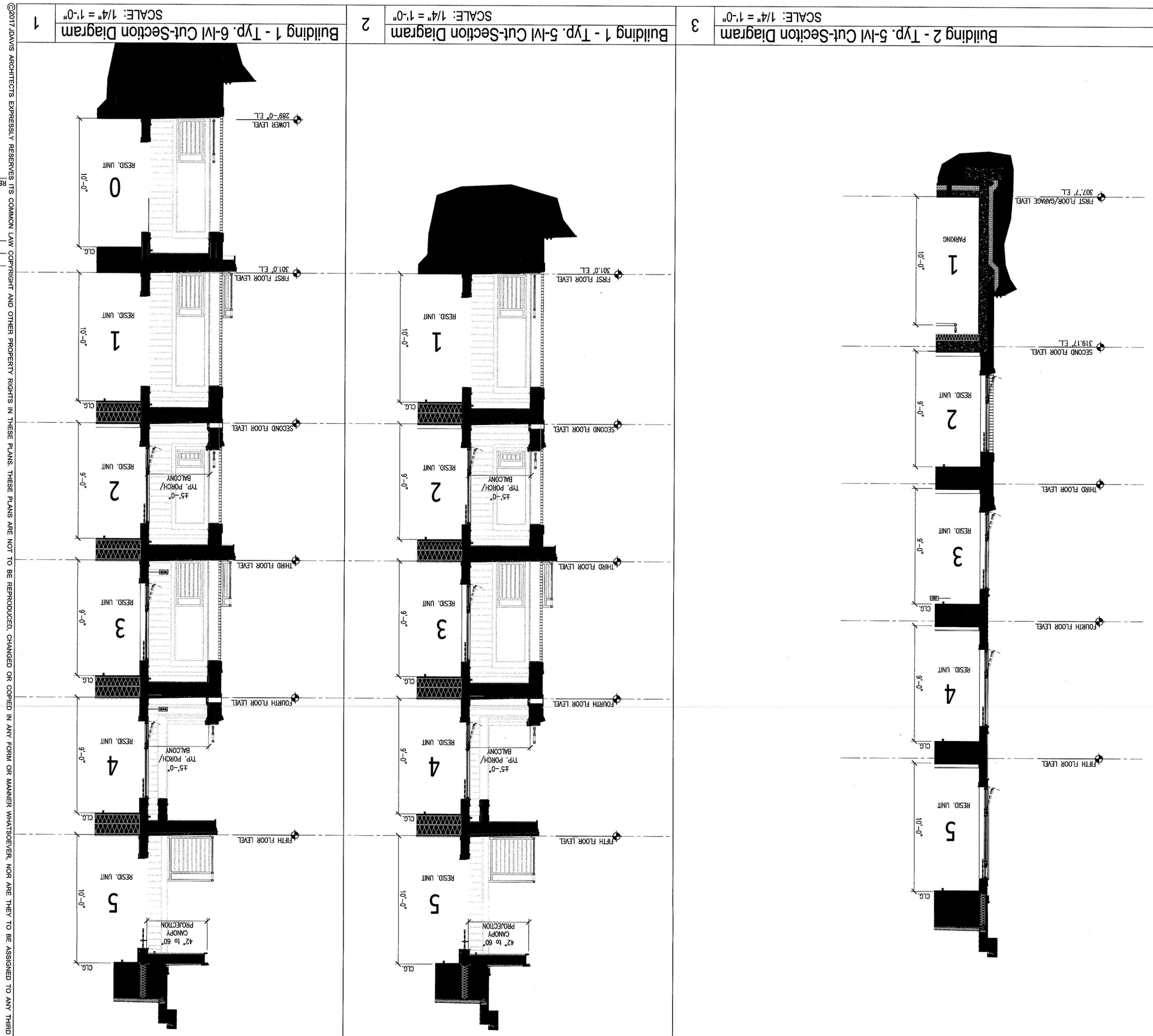

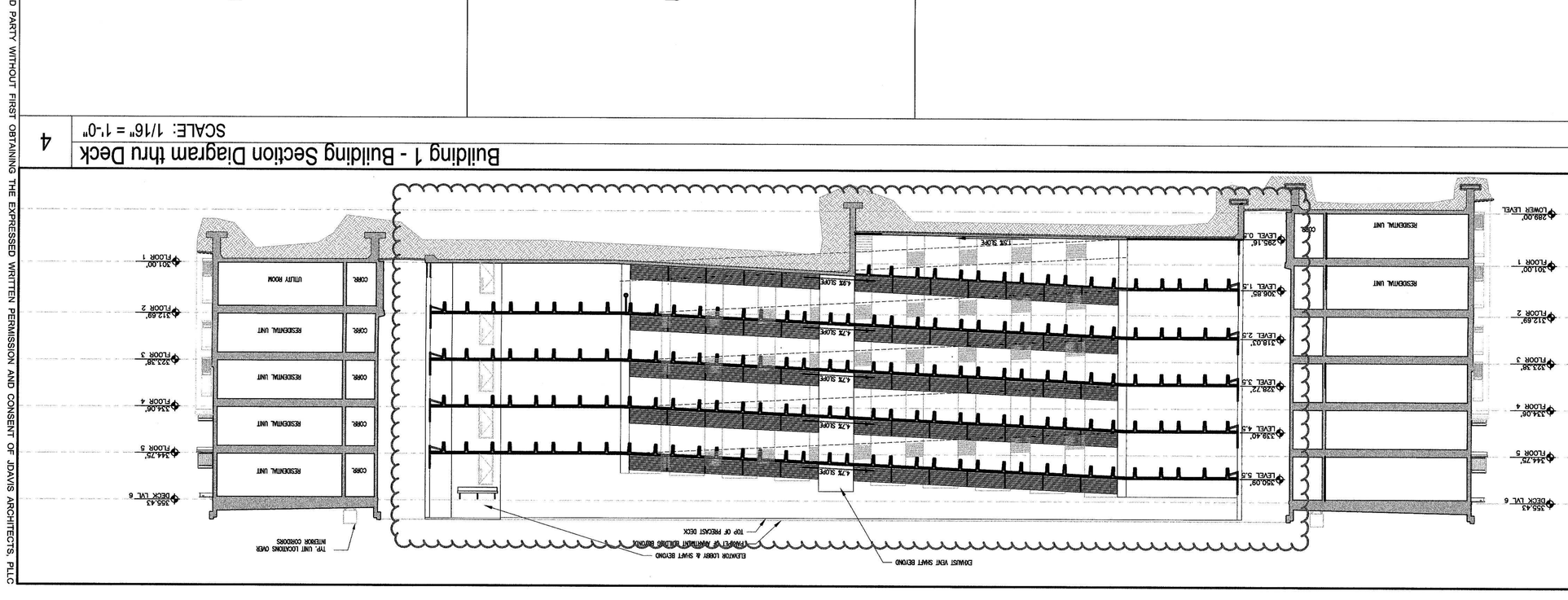

©2017 JDAVIS ARCHITECTS EXPRESSLY RESERVES ITS COMMON LAW COPYRIGHT AND OTHER PROPERTY RIGHTS IN THESE PLANS. THESE PLANS ARE NOT TO BE REPRODUCED, CHANGED OR COPIED IN ANY FORM OR MANNER WHATSOEVER, NOR ARE THEY TO BE ASSIGNED TO ANY THIRD PARTY WITHOUT FIRST OBTAINING THE EXPRESSED WRITTEN PERMISSION AND CONSENT OF JDAVIS ARCHITECTS, PLLC

REVISIONS:	
PERMIT SET	.
50% CD SET	06.12.17
DCI/CFTN PERMIT SET	04.21.17
DESIGN DEVELOPMENT	02.20.17
FDP-5 SUBMITTAL	08.07.17
SCHEMATIC DESIGN	.
ISSUE	

PROJECT: 16025

DATE

L. DAVID ARCHITECTURE, PLLC
CERT. NO 5236
RALEIGH, N.C.

FOR REFERENCE ONLY

Leon Capital Group
Hillstone
Chapel Hill, North Carolina

CONTENT: SECTION DIAGRAMS

GA3.03

JDAVIS
510 South Wilmington St. | Raleigh, NC 27601 | tel 919.835.1500
1518 Walnut St. Suite 1300 | Philadelphia, PA 19102 | tel 215.545.0121

Plotted: 09/06/17 11:38 AM By: Melissa Dees Plotted By: Melissa Dees File: K:\16025 Hillstone\Revit\Hillstone_Central.rvt

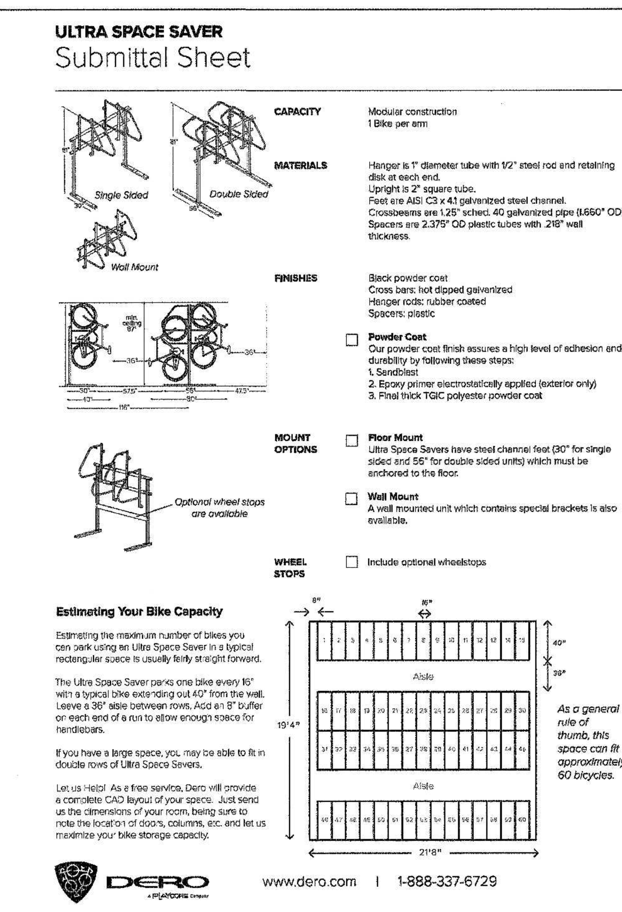

HIGH-DENSITY BIKE RACK STORAGE SPECIFICATIONS 3
SCALE: 1/4" = 1'-0"

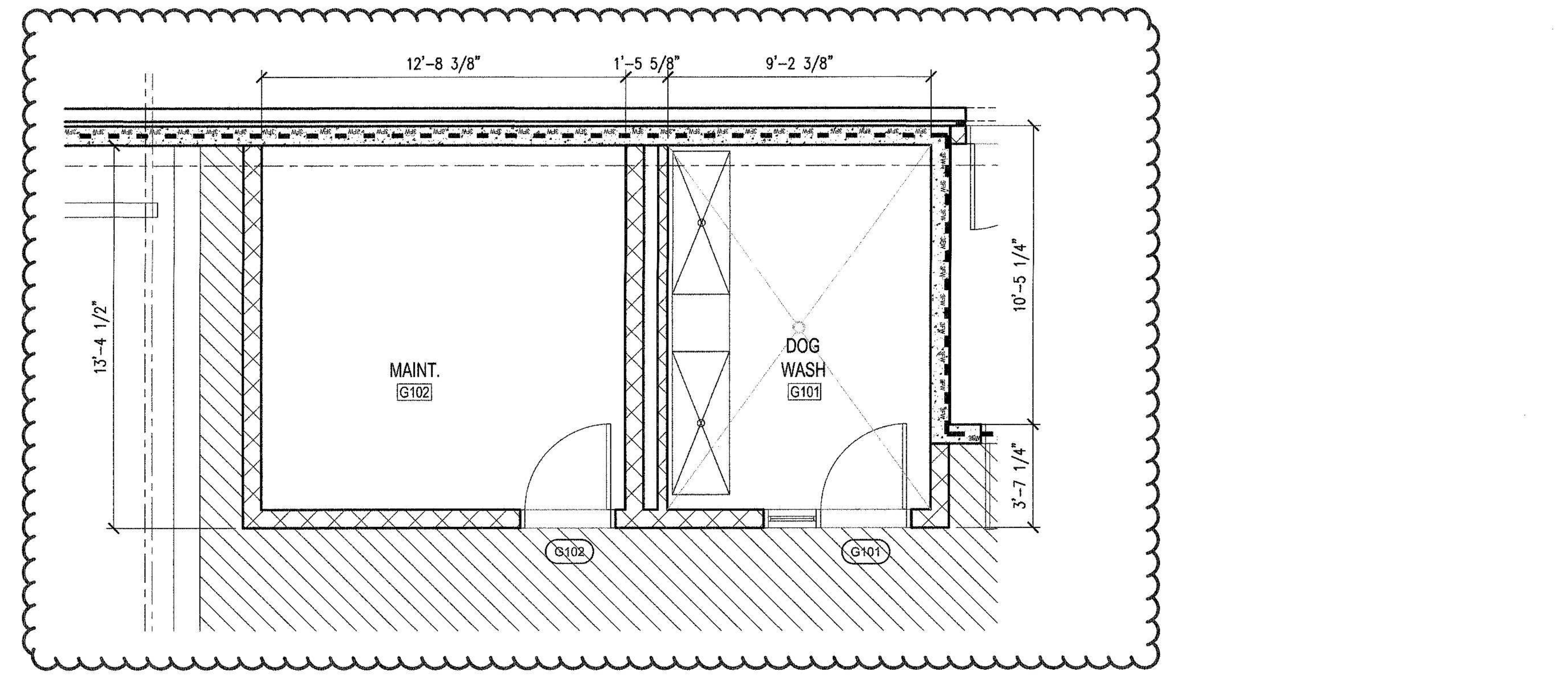

MAINTENANCE & DOG WASH 2
SCALE: 1/4" = 1'-0"

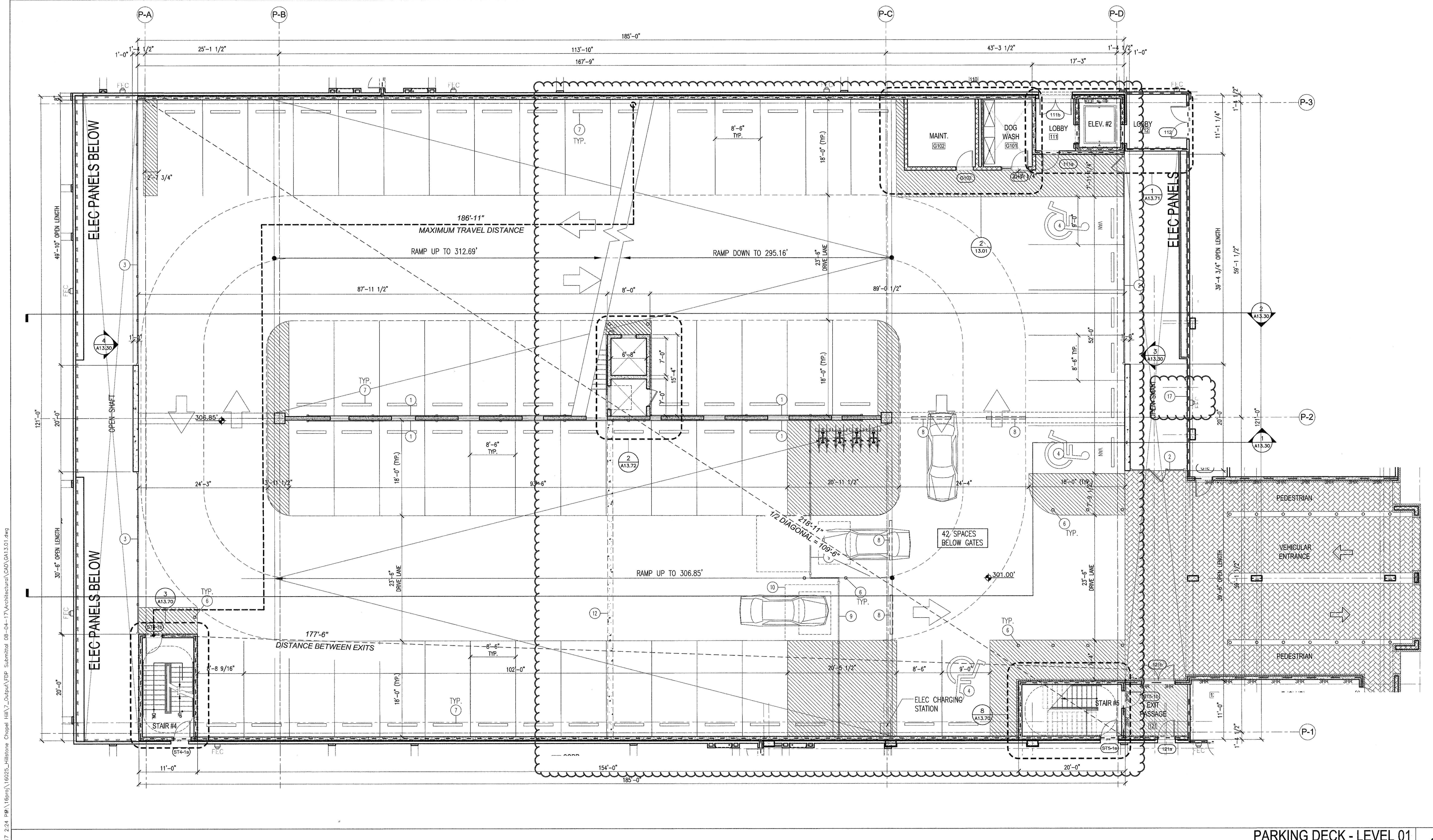

PARKING DECK - LEVEL 01 1
SCALE: 1/8" = 1'-0"

NOTES:

1. SEE "SP" SHEETS FOR PRECAST CONCRETE GARAGE DRAWINGS.
2. ALL LEVELS OF PARKING ARE OPEN. SEE CALCULATIONS.
3. ALL PARKING STRIPING WILL BE WHITE. STRIPING SHALL BE WHITE FLAT PROFESSIONAL TRAFFIC MARKING PAINT SIMILAR OR EQUAL TO PRO-PARK WATERBORNE TRAFFIC MARKING PAINT BY SHERWIN-WILLIAMS.
4. SEE PRE-CAST CONCRETE DRAWINGS FOR PRE-CAST PANEL INFORMATION.
5. ALL GUARDRAILS SHALL BE "CABLE" GUARDRAILS. EXTERIOR & INTERIOR GUARDRAILS SHALL BE DESIGNED FOR 6,000 LB VEHICLE IMPACT LOAD WHERE LOCATED 29" AND ABOVE.
6. EXTERIOR FINISH ON PRE-CAST PANELS TO BE FACTORY FINISH (GRAY) U.N.O.
7. PROVIDE PAINT FINISH ON WALLS AND FLOORS OF ELEVATOR LOBBY (U.N.O.)
8. PROVIDE ROLL APPLIED WATER RESISTANT CONCRETE SEALER ON TOP OF DOUBLE-TEES @ TOP LEVEL OF PARKING DECK.
9. SEE PRE-CAST DRAWINGS, CIVIL DRAWINGS, & PLUMBING DRAWINGS FOR FLOOR DRAIN LOCATIONS.
10. GC SHALL BE RESPONSIBLE FOR COORDINATION AND PROPER ALIGNMENT OF FLOOR SYSTEMS BETWEEN PRE-CAST PARKING DECK AND ADJACENT WOOD FRAME CORRIDORS TO ENSURE ACCESSIBLE ROUTE BETWEEN STRUCTURES.
11. ACCESSIBLE PARKING SPACES AND AISLES ARE NOT TO EXCEED A SLOPE OF 1:48 OR 2% MAX IN ANY DIRECTION PER 2009 ANSI 502.5. CONCRETE WASHES WITHIN THESE ACCESSIBLE ZONES NOT TO EXCEED 2% SLOPE.
12. PROVIDE PEDESTRIAN VEHICLE INTERFACE CROSSING SIGNAGE AND CONVEX CORNER MIRRORS AT ALL BLIND CORNERS IN ORDER TO PROVIDE PEDESTRIAN SAFETY. CONFIRM ALL LOCATIONS WITH AUTHORITY HAVING JURISDICTION.

KEY NOTES:

1. CABLE GUARDRAIL. TOP @ MIN. 42" A.F.F. HORIZONTAL STEEL CABLES @ 4" O.C. W/ 6,000 LBS PER VEHICLE LOAD. SEE DETAIL 4/A13.91
2. CABLE GUARDRAIL WITH POST ATTACHED TO TOP OF SLAB/BEAM. TOP @ MIN. 42" A.F.F. HORIZONTAL STEEL CABLES @ 4" O.C. W/ 6,000 LBS PER VEHICLE LOAD. SEE DETAIL 1/A13.91
3. CABLE GUARDRAIL WITH STANDARDS/POSTS MOUNTED TO SIDE OF DOUBLE-T's @ 10'-0" MAX SPACING. TOP @ MIN. 42" A.F.F. HORIZONTAL STEEL CABLES @ 4" O.C. W/ 6,000 LBS PER VEHICLE LOAD. SEE DETAIL 4/A13.91
4. HANDICAP ACCESSIBLE PARKING SPACE. TYPICAL SIGNAGE REQUIRED. SEE DETAIL 8/A13.91
5. WASH SLOPED TOWARDS FLOOR DRAINS - SEE PLUMBING DRAWINGS FOR DETAILS
6. 4" DIA STEEL BOLLARD. RE: DETAIL 9 & 15/A13.91
7. PRECAST CONCRETE WEELSTOP. SEE DETAIL 14/A13.91
8. HEADACHE BARS ABOVE
9. VEHICLE GATE WITH CARD READER
10. VEHICLE DETECTION LOOP
11. BIKE RACK
12. C.I.P. CONCRETE RETAINING WALL BELOW. RE: STRUCTURAL DRAWINGS
13. ACCESS CONTROL ON DOOR
14. CANOPY ABOVE
15. LIGHTPOLE LOCATION
16. VINYL COATED CHAINLINK FENCE ALONG PRECAST PARKING DECK INTERIOR WALL TO PROHIBIT ~~ACCESS TO SPACE BELOW~~
17. PROPOSED RESIDENTIAL BUILDING GAS METER LOCATION. COORDINATE FINAL LOCATION IN FIELD WITH UTILITIES.
18. ~~FLOOR DRAIN~~
19. STORM WATER
20. SANITARY SEWER
21. OIL INTERCEPTOR

RATED WALL LEGEND:

- 1 HR RATED BEARING WALL (PER UL U356 @ EXTERIOR WALL & UL U305 @ INTERIOR)
- 2 HR RATED BEARING WALL (PER UL U371 @ EXTERIOR WALL & U301 @ INTERIOR)
- 1 HR FIRE PARTITION (PER UL U341 @ TENANT SEPARATION WALL)
- 1 HR FIRE BARRIER (PER UL U305)
- 2 HR FIRE BARRIER (PER UL U301)
- 2 HR FIRE BARRIER (PER UL U905)
- 2 HR FIRE WALL (PER UL U347)
- 3 HR RATED FIRE WALL

PARKING SPACE COUNT

LEVEL 0	34	
LEVEL 1	63	INCLUDES 1 ACCESSIBLE SPACE, & 2 VAN ACCESSIBLE SPACES
LEVEL 2	71	INCLUDES 2 ACCESSIBLE SPACES
LEVEL 3	71	INCLUDES 2 ACCESSIBLE SPACES
LEVEL 4	71	INCLUDES 2 ACCESSIBLE SPACES
LEVEL 5	45	INCLUDES 3 ACCESSIBLE SPACES
TOTAL	355	INCLUDES 10 ACCESSIBLE SPACES, & 2 VAN ACCESSIBLE SPACES (12 TOTAL)

LONG-TERM BICYCLE PARKING

LEVEL 0	119	119 SPACES IN BIKE STORAGE ROOM
LEVEL 1	0	8 SPACES ON THIS LEVEL ARE FOR SHORT-TERM USE
LEVEL 2	8	-
LEVEL 3	8	-
LEVEL 4	8	-
LEVEL 5	0	-
TOTAL	143	-

1. 328 TOTAL UNITS ON SITE / 2 = 164 BIKE SPACE REQ'D
2. 164 (80%) = 132 LONG-TERM BIKE SPACES REQ'D
3. 36 ADD'TL LONG-TERM BIKE SPACE ARE PROVIDED IN BUILDING 2, PROVIDING A TOTAL OF 179 LONG-TERM BIKE SPACES FOR THE SITE.

KEY PLAN

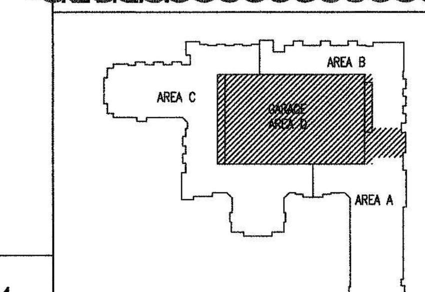

©2017 JDAVIS ARCHITECTS EXPRESSLY RESERVES ITS COMMON LAW COPYRIGHT AND OTHER PROPERTY RIGHTS IN THESE PLANS. THESE PLANS ARE NOT TO BE REPRODUCED, CHANGED OR COPIED IN ANY FORM OR MANNER WHATSOEVER, NOR ARE THEY TO BE ASSIGNED TO ANY THIRD PARTY WITHOUT FIRST OBTAINING THE EXPRESSED WRITTEN PERMISSION AND CONSENT OF JDAVIS ARCHITECTS, PLLC

JDAVIS>
510 South Wilmington St. | Raleigh, NC 27601 | tel 919.835.1500
1518 Walnut St. Suite 1308 | Philadelphia, PA 19102 | tel 215.545.0121

LEON Capital Group

Leon Capital Group
Hillstone - Building 1
Chapel Hill, North Carolina

J. DAVIS ARCHITECTS, PLLC — REGISTERED ARCHITECTURAL COMPANY — CERT. NO. 51208 — NORTH CAROLINA — RALEIGH, N.C.

		DATE
PROJECT:	16025	
ISSUE:	SCHEMATIC DESIGN	.
	FDP-5 SUBMITTAL	08.07.17
	DESIGN DEVELOPMENT	02.20.17
	DECK-FTN PERMIT SET	04.21.17
	50% CD SET	05.17.17
REVISIONS:	PERMIT SET	06.19.17
DRAWN BY:		
CHECKED BY:		
CONTENT:	PARKING DECK PLAN	
	LEVEL 01	

GA13.01