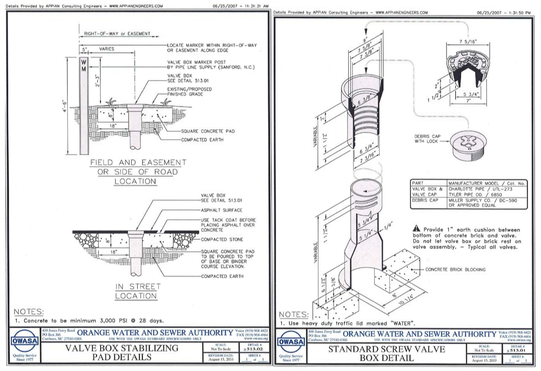

D5 / C5101 STANDARD VALVE BOX INSTALLATION
N.T.S.

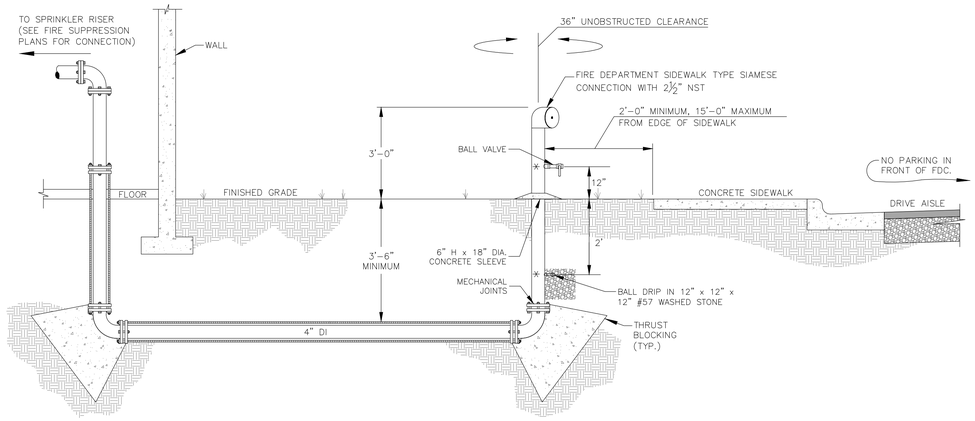

C3 / C5101 FIRE DEPARTMENT CONNECTION SCHEMATIC
N.T.S.

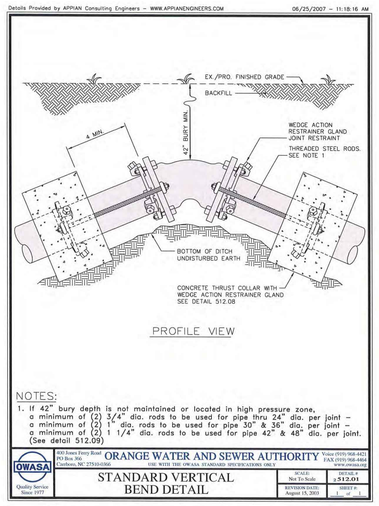

C1 / C5101 VERTICAL BEND DETAIL
N.T.S.

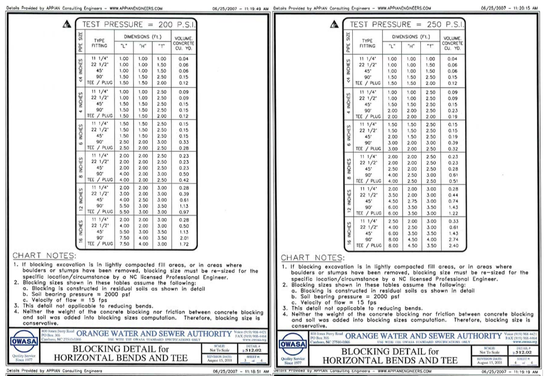

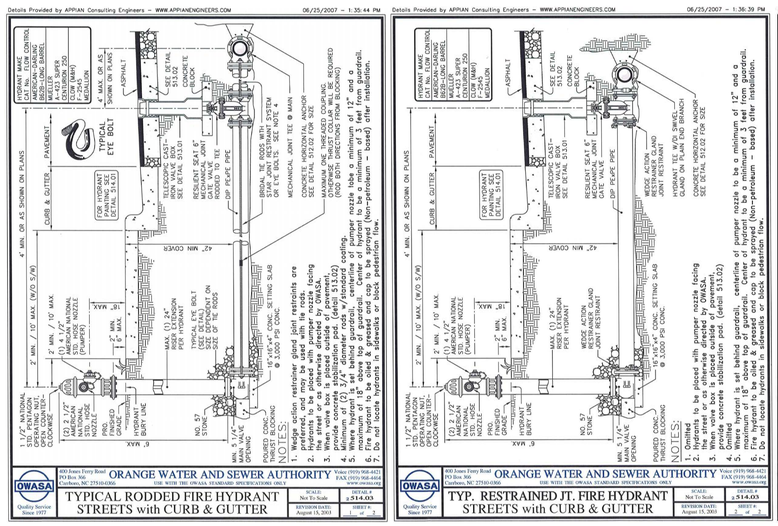

B3 / C5101 FIRE HYDRANT
N.T.S.

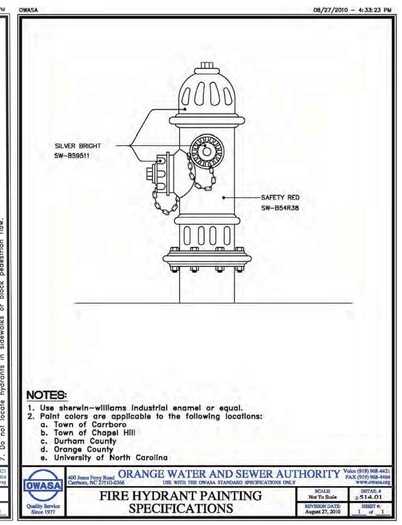

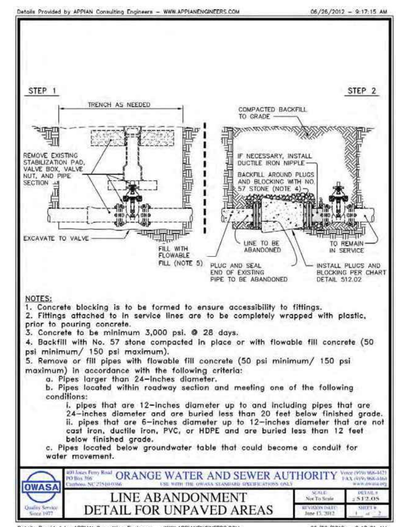

A1 / C5101 WATER LINE ABANDONMENT
N.T.S.

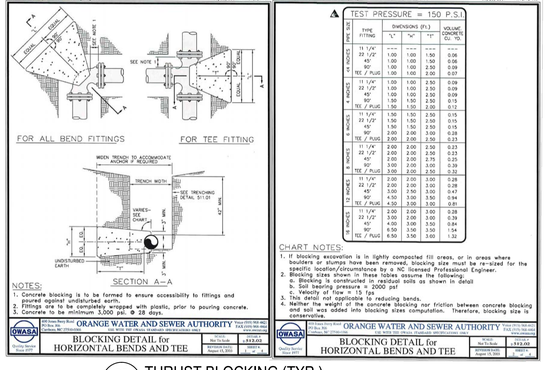

B5 / C5101 THRUST BLOCKING (TYP.)
N.T.S.

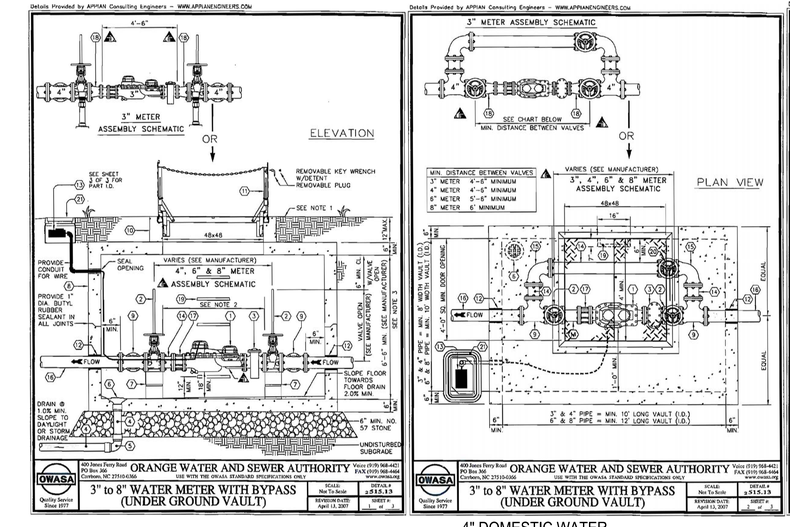

A3 / C5101 4" DOMESTIC WATER IN UNDERGROUND VAULT
N.T.S.

(✓)	PART	MANUFACTURER MODEL / Cat. No.
1	COMPOUND METER OR TURBINE METER	TO BE APPROVED BY OWASA
2	OS&Y D.I. GATE VALVE WITH RESILIENT SEATS	TO BE APPROVED BY OWASA
3	STRAINER	TO BE APPROVED BY OWASA
4	DIP CLASS 350	SIZE & TYPE DETERMINED BY NC PE.
5	DIP CLASS 350	SIZE & TYPE DETERMINED BY NC PE.
6	FLOOR DRAIN WITH STRAINER	SIZE & TYPE DETERMINED BY NC PE BASED ON SIZE OF WATER MAIN. (TO BE APPROVED BY OWASA)
7	MORTARED MASONRY BLOCK PIPE SUPPORTS (MINIMUM 4 REQUIRED)	
8	PRECAST CONCRETE UTILITY VAULT BOX. MIN. 4,000 PSI @ 28 DAYS VERIFY FITTINGS WILL FIT INSIDE BOX BEFORE ORDERING	STAY-RIGHT PRECAST VAULT, H20 LOAD RATING (OR APPROVED EQUIVALENT)
9	DIP FLANGED TEE	AMERICAN CAST IRON PIPE, UNION-TYLER PIPE CO., or U.S. PIPE & FOUNDRY
10	4'-0" MIN. WIDTH (I.D.) x 4'-0" LONG (I.D.) RISER. SEE SHEET 2 of 3 FOR MINIMUM LENGTH.	STAY-RIGHT PRECAST VAULT, H20 LOAD RATING (OR APPROVED EQUIVALENT)
11	4" WIDE x 4" LONG DOOR CAST INTO RISER (DRAIN TO OUTSIDE) SEE SHEET 2 of 3 FOR MINIMUM LENGTH.	BILCO OR HALIDAY PRODUCTS DOUBLE LEAF ACCESS DOOR. PEDESTRIAN LOAD – 300 PSF, USE H20 LOADING IN TRAFFIC AREAS. DRAIN TO OUTSIDE (OR APPROVED EQUAL)
12	WALL SLEEVE WITH LINK SEAL (OR APPROVED EQUIVALENT)	TO BE APPROVED BY OWASA
13	REMOTE METER READOUT (IN GALLONS) ELECTRONIC DRT	TO BE APPROVED BY OWASA
14	DIP FLANGE x FLANGE SPOOL PIPE OR THREADED END FOR FLANGE (VERIFY LENGTH)	AMERICAN CAST IRON PIPE, U.S. PIPE & FOUNDRY
15	DIP FLANGED 90° ELBOW (SHORT RADIUS)	AMERICAN CAST IRON PIPE, UNION-TYLER PIPE CO., or U.S. PIPE & FOUNDRY
16	4", 6" OR 8" DIP FLANGED x PE PIPE (USE 1 FULL LENGTH JOINT PIPE)	AMERICAN CAST IRON PIPE, UNION-TYLER PIPE CO., or U.S. PIPE & FOUNDRY
17	FLANGED ADAPTOR	UNIFLANGE (TO BE APPROVED BY OWASA)
18	DIP FLANGED 4"x3" REDUCER	AMERICAN CAST IRON PIPE, UNION-TYLER PIPE CO., or U.S. PIPE & FOUNDRY
19	STEPS @ 12" O.C.	TO BE APPROVED BY OWASA
20	OS&Y GATE VALVE WITH RESILIENT SEATS	DRILL STEM FOR SEALING IN CLOSED POSITION (TO BE APPROVED BY OWASA)
21	METER BOX	CDR SYSTEMS CORP. / WA04-1118-12C MID-STATES PLASTICS, INC. / MSBC 1118-12

NOTES:
1. Ensure positive surface grade away from box.
2. 3" Meter to use 4" OS&Y DI valves and (2) 4"x3" DI flanged reducers with section of 3" flanged DI pipe and 3" DI flanged coupling adaptor.
3. For vaults less than 6'-6" high see detail 515.14.

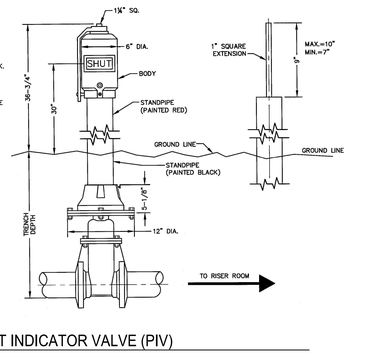

A5 / C5101 POST INDICATOR VALVE (PIV)
N.T.S.

UTILITY DETAILS

REVIEW DRAWING NOT FOR CONSTRUCTION

BALLENTINE ASSOCIATES, P.A.
221 PROVIDENCE ROAD, CHAPEL HILL, N.C. 27514
(919) 929 – 0481 (919) 489 – 4789

COPYRIGHT © 2017
BALLENTINE ASSOCIATES, P.A.
THIS DOCUMENT IS THE PROPERTY OF BALLENTINE ASSOCIATES, P.A. ALL RIGHTS RESERVED. ANY REPRODUCTION OF THIS DOCUMENT OR POSSESSION WITHOUT PRIOR PERMISSION OF BALLENTINE ASSOCIATES, P.A. WILL BE SUBJECT TO LEGAL ACTION.

NUM	REVISIONS	DATE
A	PER E-F FDP REVIEW COMMENTS	28 JUN 17

ISSUED	DATE
E-F FDP SUBMITTAL #1	21 APR 17
E-F FDP SUBMITTAL #2	28 JUN 17

OWNER INFORMATION
RAM REALTY ADVISORS
1930 CAMDEN RD.
CHARLOTTE, NC 28203

OWNERS REPRESENTATIVE:
DAVID KLEPSER
PH. (704) 377–8773
FAX (704) 377–6920
EMAIL dklepser@ramrealtyllc.com

FORDHAM BLVD. APARTMENTS
CHAPEL HILL, NORTH CAROLINA
E-F FORM DISTRICT PERMIT DRAWINGS

JOB #: 116026.00
DATE: 21 APR 17
SCALE: AS NOTED
DRAWN BY: D.W.S.
REVIEWED BY: G.J.R.

SHEET
C5101

N:\Projects\116026.00 Fordham Blvd Apartments\1_Dwg\B-Model Files\C5101-Utility Details-Fordham.dwg, 6/27/2017 11:35:41 PM, dwsith

Details Provided by APPIAN Consulting Engineers – WWW.APPIANENGINEERS.COM 12/20/2016 – 1:32:59 PM

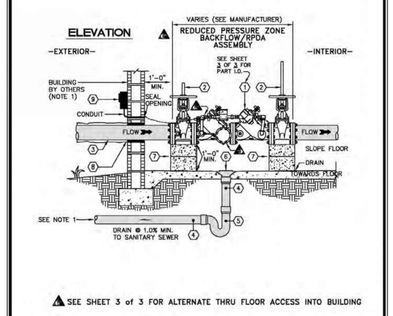

⚠ SEE SHEET 3 of 3 FOR ALTERNATE THRU FLOOR ACCESS INTO BUILDING

NOTES:

1. OPTIONAL FLOOR DRAIN.

OWASA Quality Service Since 1977 — 400 Jones Ferry Road, PO Box 366, Carrboro, NC 27510-0366 — ORANGE WATER AND SEWER AUTHORITY — USE WITH THE OWASA STANDARD SPECIFICATIONS ONLY — Voice (919) 968-4421, FAX (919) 968-4464, www.owasa.org

2 1/2" to 10" RPZ, RPDA ASSEMBLY (INDOOR) — SCALE: Not To Scale — REVISION DATE: December 20, 2016 — DETAIL # 515.09 — SHEET # 3 of 3

Details Provided by APPIAN Consulting Engineers – WWW.APPIANENGINEERS.COM 12/20/2016 – 1:37:54 PM

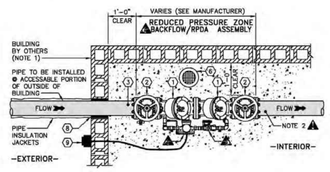

PLAN VIEW

NOTES:

1. Backflow assembly is to be installed at an accessible portion of the building, provide doorway & key.
2. For critical facilities, provide bypass line with backflow assembly.
3. Provide minimum 3" annular clearance around riser.

OWASA Quality Service Since 1977 — 400 Jones Ferry Road, PO Box 366, Carrboro, NC 27510-0366 — ORANGE WATER AND SEWER AUTHORITY — USE WITH THE OWASA STANDARD SPECIFICATIONS ONLY — Voice (919) 968-4421, FAX (919) 968-4464, www.owasa.org

2 1/2" to 10" RPZ, RPDA ASSEMBLY (INDOOR) — SCALE: Not To Scale — REVISION DATE: December 20, 2016 — DETAIL # 515.09 — SHEET # 3 of 3

Details Provided by APPIAN Consulting Engineers – WWW.APPIANENGINEERS.COM 12/20/2016 – 1:40:11 PM

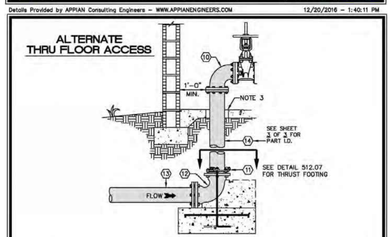

Ⓘ	PART	MANUFACTURER MODEL / Cat. No.
1	BACKFLOW PREVENTER, AS APPLICABLE	USC & ASSE APPROVED
2	OS&Y GATE VALVE WITH RESILIENT SEATS	TO BE APPROVED BY OWASA
3	DIP FLANGE x FLANGE PIPE (VERIFY LENGTH)	AMERICAN CAST IRON PIPE, or GRIFFIN PIPE CO. TO BE APPROVED BY OWASA
4	CISP OR PVC SCH 40 PIPE	———
5	CISP OR PVC SCH 40 "P" TRAP	———
6	FLOOR DRAIN	SIZE & TYPE DETERMINED BY NC PE. TO BE APPROVED BY OWASA
7	MASONRY BLOCK	
8	WALL SLEEVE with LINK SEAL	TO BE APPROVED BY OWASA
9	METER BOX WITH ERT AND METER	PURCHASED FROM OWASA
10	90° DIP FLANGE x FLANGE ELBOW	AMERICAN CAST IRON PIPE, or GRIFFIN PIPE CO., or UNION–TYLER PIPE CO., or U.S. PIPE & FOUNDRY
11	WEDGE ACTION RESTRAINER GLAND JOINT RESTRAINT	EBAA IRON SALES, INC. , FORD
12	90° DIP MJ x MJ ELBOW	AMERICAN CAST IRON PIPE, GRIFFIN PIPE CO., UNION–TYLER PIPE CO., U.S. PIPE & FOUNDRY
13	DIP FLANGE x PE PIPE (VERIFY LENGTH)	AMERICAN CAST IRON PIPE, GRIFFIN PIPE CO., UNION–TYLER PIPE CO., U.S. PIPE & FOUNDRY
14	3" THRU 12" DIP	AMERICAN CAST IRON PIPE, GRIFFIN PIPE CO., UNION–TYLER PIPE CO., U.S. PIPE & FOUNDRY

OWASA Quality Service Since 1977 — 400 Jones Ferry Road, PO Box 366, Carrboro, NC 27510-0366 — ORANGE WATER AND SEWER AUTHORITY — USE WITH THE OWASA STANDARD SPECIFICATIONS ONLY — Voice (919) 968-4421, FAX (919) 968-4464, www.owasa.org

2 1/2" to 10" RPZ, RPDA ASSEMBLY (INDOOR) — SCALE: Not To Scale — REVISION DATE: December 20, 2016 — DETAIL # 515.09 — SHEET # 3 of 3

A4 / C5102 INDOOR BACK FLOW PREVENTER
N.T.S.

Details Provided by APPIAN Consulting Engineers – WWW.APPIANENGINEERS.COM 06/25/2007 – 12:12:38 PM

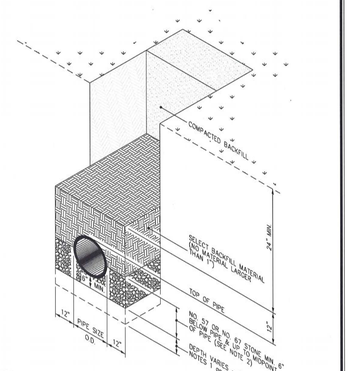

NOTES:

1. Foundation stone shall be required when soil conditions are unsuitable.
2. An additional 1 inch depth of cushioning material will be required for each additional 2 feet of trench depth in excess of 16 feet up to a maximum of 12 inches of cushioning material.

OWASA Quality Service Since 1977 — 400 Jones Ferry Road, PO Box 366, Carrboro, NC 27510-0366 — ORANGE WATER AND SEWER AUTHORITY — USE WITH THE OWASA STANDARD SPECIFICATIONS ONLY — Voice (919) 968-4421, FAX (919) 968-4464, www.owasa.org

SANITARY SEWER BEDDING DETAIL — SCALE: Not To Scale — REVISION DATE: August 15, 2001 — DETAIL # 531.01 — SHEET # 1 of 1

C3 / C5102 SANITARY SEWER BEDDING
N.T.S.

Details Provided by APPIAN Consulting Engineers – WWW.APPIANENGINEERS.COM 06/25/2007 – 12:19:28 PM

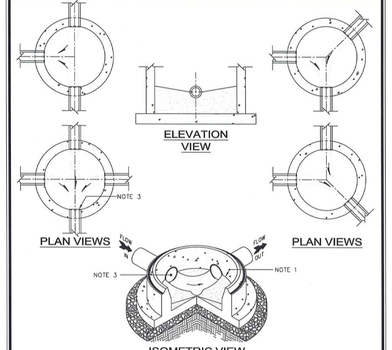

NOTES:

1. Concrete benches must be sloped away from the manhole wall beginning in line with the top of the pipe and sloped down to the spring-line of the pipe invert.
2. Service line entries to have cast in place troughs.
3. Radius of invert must have enough room to be able to insert air plugs and TV equipment.

OWASA Quality Service Since 1977 — 400 Jones Ferry Road, PO Box 366, Carrboro, NC 27510-0366 — ORANGE WATER AND SEWER AUTHORITY — USE WITH THE OWASA STANDARD SPECIFICATIONS ONLY — Voice (919) 968-4421, FAX (919) 968-4464, www.owasa.org

STANDARD SEWER INVERT PLANS FOR MANHOLE — SCALE: Not To Scale — REVISION DATE: March 11, 2005 — DETAIL # 532.02 — SHEET # 1 of 1

C2 / C5102 SAN. SEWER MANHOLE INVERT
N.T.S.

Details Provided by APPIAN Consulting Engineers – WWW.APPIANENGINEERS.COM 02/25/2013 – 1:35:48 PM

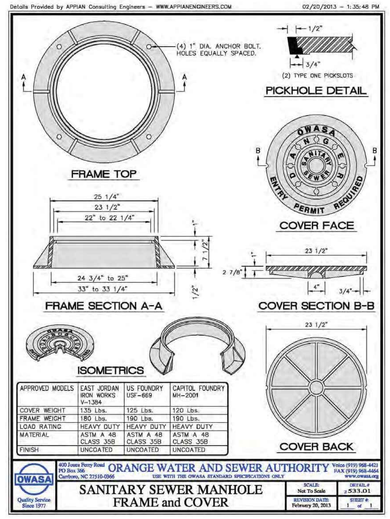

APPROVED MODELS	EAST JORDAN IRON WORKS V-1394	US FOUNDRY USF-869	CAPITOL FOUNDRY MH-2009
COVER WEIGHT	135 Lbs.	125 Lbs.	120 Lbs.
FRAME WEIGHT	180 Lbs.	190 Lbs.	190 Lbs.
LOAD RATING	HEAVY DUTY	HEAVY DUTY	HEAVY DUTY
MATERIAL	ASTM A 48 CLASS 35B	ASTM A 48 CLASS 35B	ASTM A 48 CLASS 35B
FINISH	UNCOATED	UNCOATED	UNCOATED

OWASA Quality Service Since 1977 — 400 Jones Ferry Road, PO Box 366, Carrboro, NC 27510-0366 — ORANGE WATER AND SEWER AUTHORITY — USE WITH THE OWASA STANDARD SPECIFICATIONS ONLY — Voice (919) 968-4421, FAX (919) 968-4464, www.owasa.org

SANITARY SEWER MANHOLE FRAME and COVER — SCALE: Not To Scale — REVISED: February 08, 2013 — DETAIL # 533.01 — SHEET # 1 of 1

C1 / C5102 SAN. SEWER MANHOLE COVER
N.T.S.

Details Provided by APPIAN Consulting Engineers – WWW.APPIANENGINEERS.COM (Xtext (Wtext))

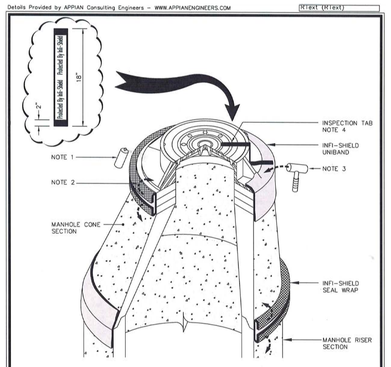

MANHOLE APPLICATION

INSTALLATION NOTES:

1. Clean casting frame, riser rings and cone section. Spray primer to areas where attaching non-hardening butyl mastic.
2. Install the Infi-shield External Seal on the outside surface of the adjustment ring area covering all grade rings. Remove protective tape and fold back on to the structure.
3. Using a rubber hammer, tap the sealing surface area.
4. Ensure lid and casting is clean. Attach inspection tab to manhole lid and backfill.
5. Contact Sealing Systems Inc. for additional installation instructions @ 800-478-2054.

OWASA Quality Service Since 1977 — 400 Jones Ferry Road, PO Box 366, Carrboro, NC 27510-0366 — ORANGE WATER AND SEWER AUTHORITY — USE WITH THE OWASA STANDARD SPECIFICATIONS ONLY — Voice (919) 968-4421, FAX (919) 968-4464, www.owasa.org

INFI-SHIELD EXTERNAL SEALING DETAIL — SCALE: Not To Scale — REVISION DATE: April 15, 2002 — DETAIL # 532.09 — SHEET # 1 of 1

B3 / C5102 INFI-SHIELD SEAL WRAP
N.T.S.

Details Provided by APPIAN Consulting Engineers – WWW.APPIANENGINEERS.COM (Xtext (Wtext))

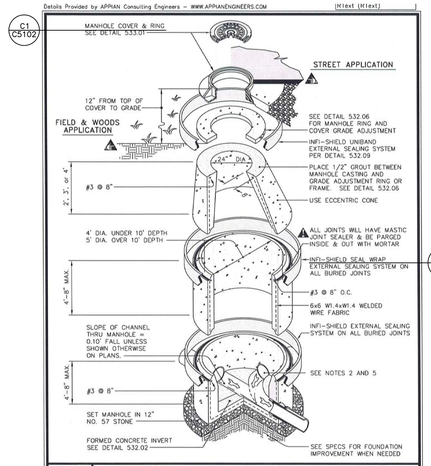

OWASA Quality Service Since 1977 — 400 Jones Ferry Road, PO Box 366, Carrboro, NC 27510-0366 — ORANGE WATER AND SEWER AUTHORITY — USE WITH THE OWASA STANDARD SPECIFICATIONS ONLY — Voice (919) 968-4421, FAX (919) 968-4464, www.owasa.org

STANDARD ECCENTRIC MANHOLE DETAIL — SCALE: Not To Scale — REVISION DATE: April 15, 2007 — DETAIL # 532.01 — SHEET # 1 of 2

Details Provided by APPIAN Consulting Engineers – WWW.APPIANENGINEERS.COM

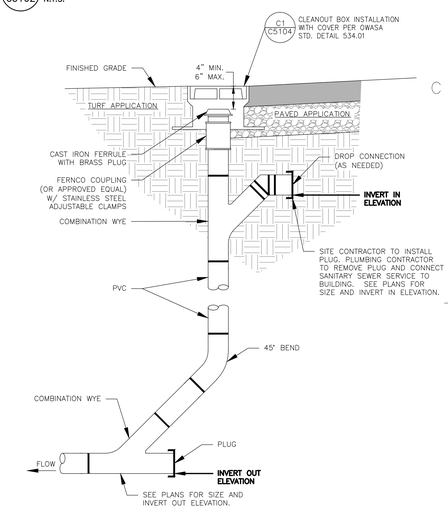

B1 / C5102 SAN. SEWER CLEANOUT ASSEMBLY
N.T.S.

Details Provided by APPIAN Consulting Engineers – WWW.APPIANENGINEERS.COM 12/20/2016 – 1:32:59 PM

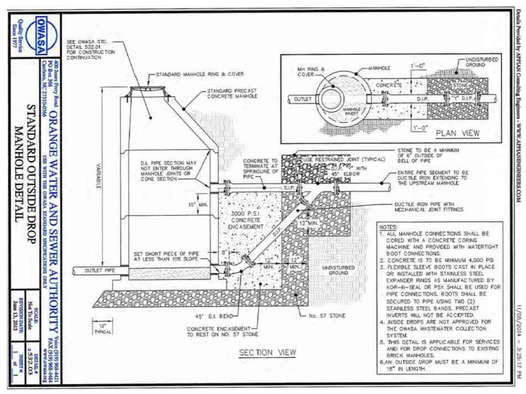

NOTES:

1. ALL MANHOLE CONNECTIONS SHALL BE CORED WITH A CONCRETE CORING MACHINE AND PROVIDED WITH WATERTIGHT BOOT CONNECTIONS.
2. CONCRETE IS TO BE MINIMUM 4,000 PSI
3. FLEXIBLE SLEEVE BOOTS CAST IN PLACE OR INSTALLED WITH STAINLESS STEEL EXPANDER RINGS AS MANUFACTURED BY KOR-N-SEAL OR PSX SHALL BE USED FOR PIPE CONNECTIONS. BOOTS SHALL BE SECURED TO PIPE USING TWO (2) STAINLESS STEEL BANDS. PRECAST INVERTS WILL NOT BE ACCEPTED.
4. INSIDE DROPS ARE NOT APPROVED FOR THE OWASA WASTEWATER COLLECTION SYSTEM
5. THIS DETAIL IS APPLICABLE FOR SERVICES WITH DROP CONNECTIONS TO EXISTING BRICK MANHOLES.
6. AN OUTSIDE DROP MUST BE A MINIMUM OF 18" IN LENGTH.

OWASA Quality Service Since 1977 — 400 Jones Ferry Road, PO Box 366, Carrboro, NC 27510-0366 — ORANGE WATER AND SEWER AUTHORITY — USE WITH THE OWASA STANDARD SPECIFICATIONS ONLY — Voice (919) 968-4421, FAX (919) 968-4464, www.owasa.org

STANDARD OUTSIDE DROP MANHOLE DETAIL — SCALE: NOT TO SCALE — REVISED DATE: 03/07/07 — DETAIL # 535.01 — SHEET # 1 of 1

A3 / C5102 SAN. SEWER OUTSIDE DROP MANHOLE
N.T.S.

Details Provided by APPIAN Consulting Engineers – WWW.APPIANENGINEERS.COM 11/20/2016 – 1:31:12 PM

PART	MANUFACTURER MODEL / Cat. No.
SLEEVE BOOTS	KOR–N–SEAL or PSX

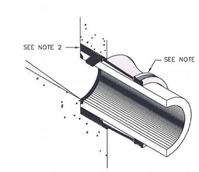

NOTES:

1. Concrete strength to be 4,000 PSI minimum.
2. Pipes will be grouted inside and out.
3. Joints will have mastic joint sealer and be parged inside and out with mortar.
4. Reinforcement design to conform to the requirements of ASTM C478.
5. Flexible sleeve boots cast in place or installed with stainless steel expander rings as manufactured by Kor–N–Seal or PSX shall be used for pipe connections. Boots shall be secured to pipe using (2) stainless steel bands. Precast inverts will not be accepted, unless otherwise directed by OWASA's inspectors.

OWASA Quality Service Since 1977 — 400 Jones Ferry Road, PO Box 366, Carrboro, NC 27510-0366 — ORANGE WATER AND SEWER AUTHORITY — USE WITH THE OWASA STANDARD SPECIFICATIONS ONLY — Voice (919) 968-4421, FAX (919) 968-4464, www.owasa.org

STANDARD ECCENTRIC MANHOLE DETAIL — SCALE: Not To Scale — REVISION DATE: April 15, 2007 — DETAIL # 532.01 — SHEET # 2 of 2

A2 / C5102 PRECAST CONCRETE SAN. SEWER MANHOLE
N.T.S.

UTILITY DETAILS

REVIEW DRAWING NOT FOR CONSTRUCTION

BALLENTINE ASSOCIATES, P.A.
221 PROVIDENCE ROAD, CHAPEL HILL, N.C. 27514
(919) 929 – 0481 (919) 489 – 4789

COPYRIGHT © 2017 BALLENTINE ASSOCIATES, P.A. THIS DOCUMENT IS THE PROPERTY OF BALLENTINE ASSOCIATES, P.A. ALL RIGHTS RESERVED. ANY REPRODUCTION OF THIS DOCUMENT OR POSSESSION WITHOUT PRIOR PERMISSION OF BALLENTINE ASSOCIATES, P.A. WILL BE SUBJECT TO LEGAL ACTION.

Ballentine Associates, P.A. CORPORATE SEAL C328 NORTH CAROLINA Chapel Hill

NORTH CAROLINA PROFESSIONAL SEAL 042542 ENGINEER JOHN W. DILLARD III

NUM	REVISIONS	DATE
A	PER E–F FDP REVIEW COMMENTS	28 JUN 17

ISSUED	DATE
E–F FDP SUBMITTAL #1	21 APR 17
E–F FDP SUBMITTAL #2	28 JUN 17

OWNER INFORMATION
RAM REALTY ADVISORS
1930 CAMDEN RD.
CHARLOTTE, NC 28203

OWNERS REPRESENTATIVE:
DAVID KLEPSER
PH. (704) 377–8773
FAX (704) 377–6920
EMAIL dklepser@ramrealestate.com

FORDHAM BLVD. APARTMENTS

CHAPEL HILL, NORTH CAROLINA

E-F FORM DISTRICT PERMIT DRAWINGS

JOB #: 116026.00
DATE: 21 APR 17
SCALE: AS NOTED
DRAWN BY: D.W.S.
REVIEWED BY: G.J.R.

SHEET
C5102

GENERAL NOTES:

USE STANDARD OR JUMBO BRICK FOR WALL CONSTRUCTION. SOLID CONCRETE BRICK OR BLOCK ARE OPTIONAL WALL CONSTRUCTION MATERIAL

PRECAST UNITS MADE OF CLASS "AA" CONCRETE MAY BE USED IN LIEU OF BRICK MASONRY CONTRUCTION. SUBMIT DESIGN OF PRECAST UNITS FOR APPROVAL PRIOR TO CONSTRUCTION.

INCLUDE ALL ADJUSTMENTS TO WALLS, SLABS OR REINFORCING MATERIAL IN THE UNIT PRICE BID FOR EACH UNIT.

INSTALL OPTIONAL MANHOLE IN POSITION AS DIRECTED BY THE ENGINEER. CUT OR BEND ALL REBAR CROSSING THIS OPENING TO ALLOW 2" MINIMUM CONCRETE COVERAGE. ENCLOSE THE OPENING WITH 8 "A" BARS TIED TO TO THE REBAR MAT AND SET SO A MINIMUM OF 3" CONCRETE COVER IS ATTAINED. REFERENCE STD. NO. 840.54 FOR MANHOLE INFORMATION.

PROVIDE JUNCTION BOXES WITH MAHNOLES OVER 3'-6" IN DEPTH WITH STEPS PLACED ON 12" CENTERS. REFERENCE STD. NO. 840.66.

SPACE DOWEL "C" BARS AT A MAXIMUM OF 12" CENTERS.

MAXIMUM DEPTH OF THIS UNIT AS SHOWN IS 12'.

CONSTRUCT THE JUNCTION BOX IN ACCORDANCE WITH SECTIONS 830, 832, 834 AND 840 OF THE STANDARD SPECIFICATIONS.

BILL OF MATERIAL

BAR	QTY.	SIZE	LENGTH	WEIGHT
A	8	#5	1'-2"	9.7
B	14	#5	5'-6"	80.3
C	26	#4	1'-6"	26.1
Y	14	#5	6'-11⅜"	101.5
STEEL TOTAL WEIGHT				217.6
CU. YDS. CLASS "AA" CONC.				2.6
CU. YDS. BRICK/FT. HT. (8")				0.53
CU. YDS. BRICK/FT. HT. (12")				0.84

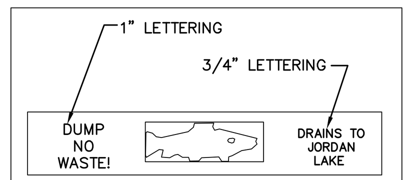

NOTE:
ALL STORMDRAIN INLET HOODS AND COVERS INSTALLED OR REPLACED WITHIN THE CHAPEL HILL PLANNING JURISDICTION AFTER JULY 31, 2000 SHALL BE PRE-CAST WITH THE MESSAGE: "DUMP NO WASTE ! DRAINS TO JORDAN LAKE" (INCLUDING THE CAST IMAGE OF A FISH).

JORDAN LAKE STAMP

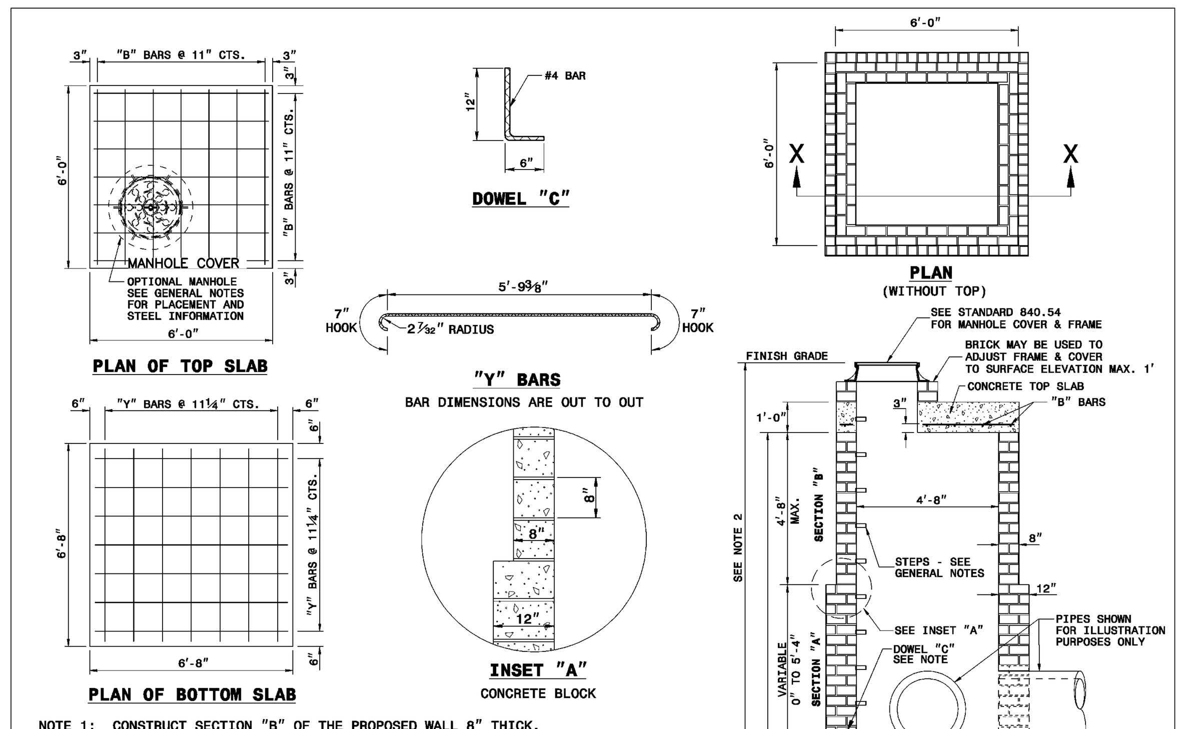

NOTE 1: CONSTRUCT SECTION "B" OF THE PROPOSED WALL 8" THICK. AND SECTION "A" 12" THICK.
NOTE 2: IF PROPOSED STRUCTURE EXCEEDS 12'-0" VERTICAL HEIGHT A DESIGN WILL BE REQUIRED FOR APPROVAL.
NOTE 3: USE SINGLE MAT REINFORCING STEEL; EXCEPT DOUBLE MAT STEEL MAY BE USED IN LIEU OF HOOK BARS IN BASE SLAB.

NCDOT STD. DETAIL 840.34
(TRAFFIC BEARING JUNCTION BOX)

GENERAL NOTES

USE 4000 PSI MINIMUM COMPRESSIVE STRENGTH CONCRETE.

FABRICATE, ASSEMBLE AND DESIGN PRECAST MANHOLE COMPONENTS ACCORDANCE WITH AASHTO M199.

ASSEMBLE RISER AND GRADE RINGS WITH THE STEPS SPACED 12" FROM THE TOP TO THE BOTTOM OF THE MANHOLE.

WHERE THE MANHOLE IS EXPOSED TO ROAD TRAFFIC, CONSTRUCT THE TOP OF THE MANHOLE FLUSH WITH THE GROUND AND A MINIMUM OF 9" ABOVE THE GROUND AT OTHER LOCATIONS.

LIMIT DEPTH OF FILL TO 30'-0" FROM FINSH GRADE TO TOP OF BOTTOM SLAB.

THE MIN. SLAB THICKNESS 'T' IS THE DIMENSION OF THE THINNEST PORTION OF THE TOP/BOTTOM SLAB.

* TOP MAT OF REINFORCEMENT MAY BE NEGLECTED IF TOP SLAB HAS A DISTINGUISHABLE TOP AND BOTTOM.

D	W	T	As
INTERNAL DIAMETER (FT.)	MIN. WALL THICKNESS (IN.)	MIN. TOP/BOTTOM SLAB THICKNESS (IN.)	MIN. CIRCUMFERENTIAL AREA OF STEEL PER VERTICAL FT. (SQ. IN.)
4	4	6	0.12
5	5	8	0.15
6	6	8	0.18

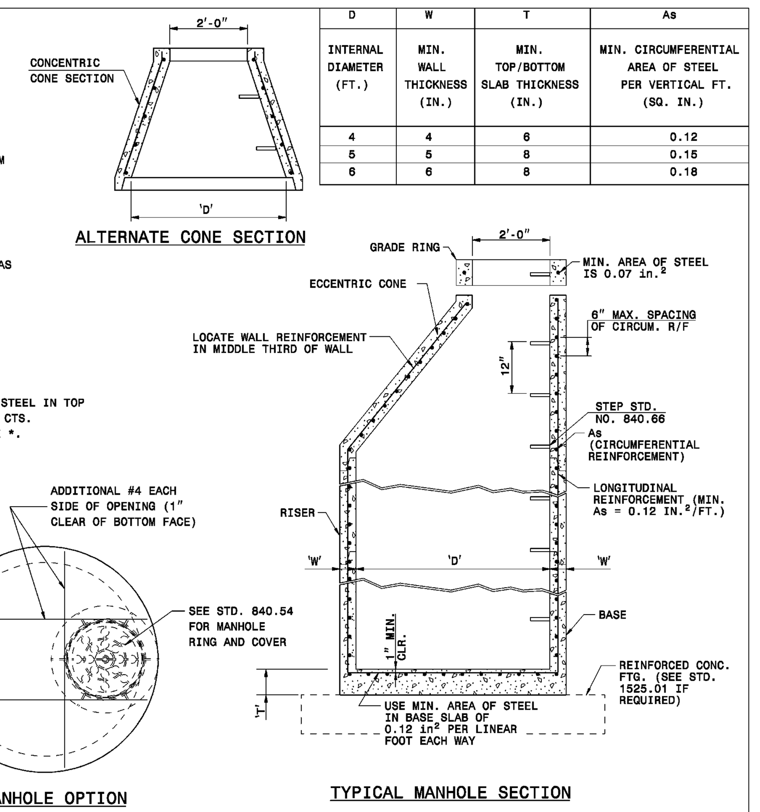

NCDOT STD. DETAIL 840.52
(PRECAST MANHOLE – 12" TO 48" PIPE)

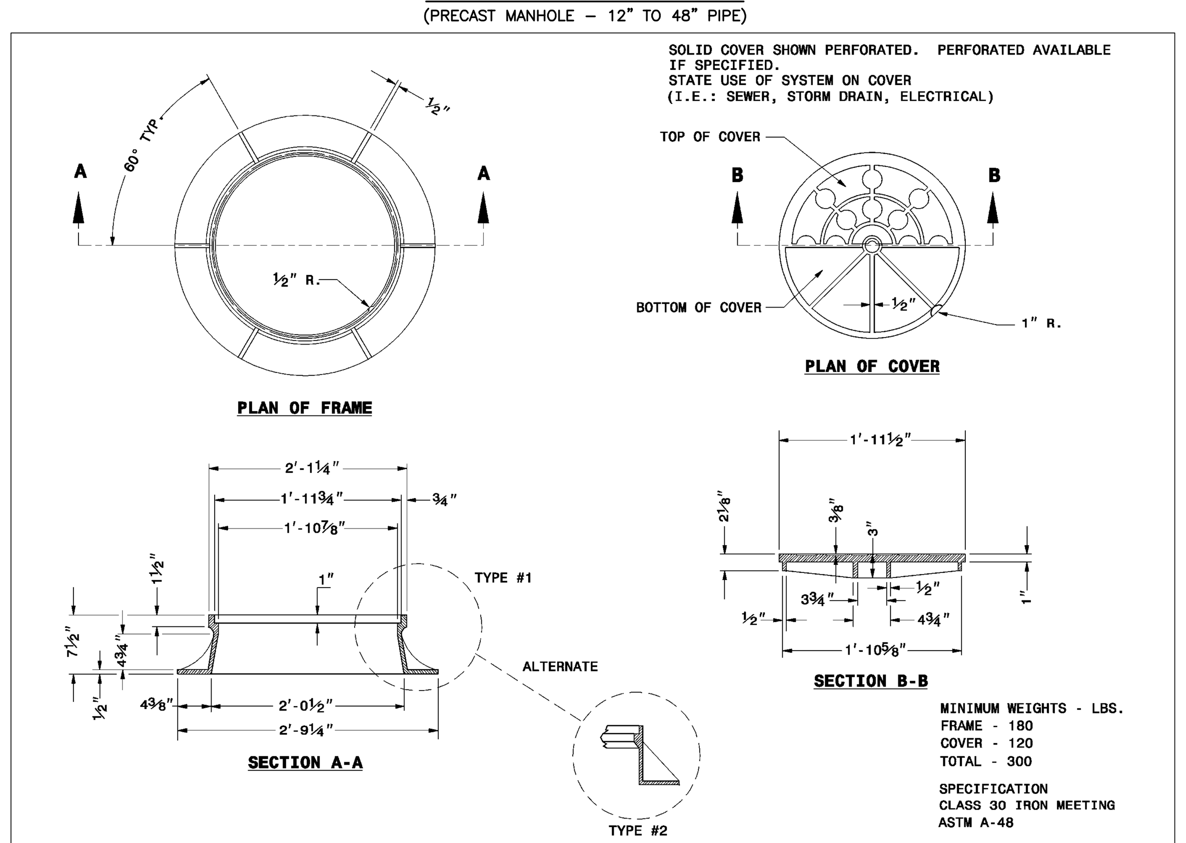

NCDOT STD. DETAIL 840.54
(MANHOLE COVER & FRAME)

A5 / C5201 **STORM JUNCTION BOX**
SCALE: N.T.S.

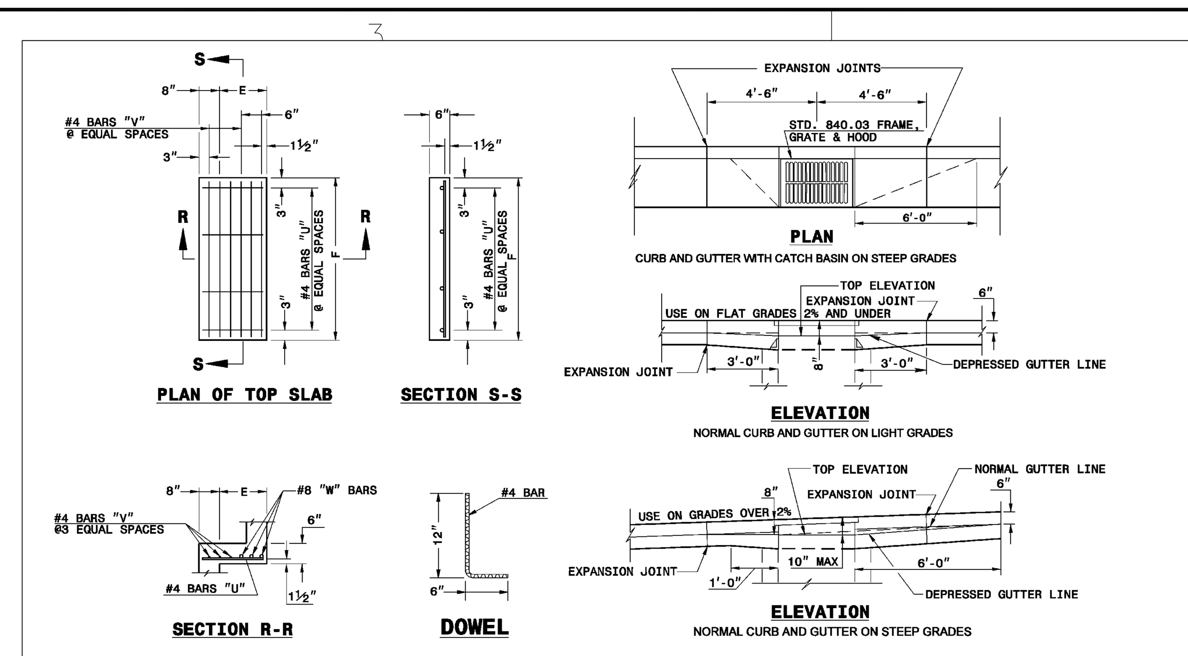

MINIMUM DIMENSIONS AND QUANTITIES FOR BRICK CATCH BASIN (BASED ON MIN. HEIGHT, H, WITH NO RISER)*

DIMENSIONS OF BOX AND PIPE: PIPE D	SPAN A	WIDTH B	WIDTH C	SPAN G	MIN. HEIGHT H	TOP SLAB DIMENSIONS: E	F	BARS-U NO.	BARS-U LENGTH	BARS-V NO.	BARS-V LENGTH	BARS-W NO.	BARS-W LENGTH	TOTAL LBS.	CU. YDS. CONC. IN BOX: TOP SLAB	BOTTOM SLAB	TOTAL CONC.	BRICK MASONRY: BRICK MSNR. IN WALLS	TOTAL BRICK AND CONCRETE	DEDUCTIONS ONE PIPE: C.M.	R.C.
12"	3'-0"	2'-2"	--	--	2'-9"	--	--	--	--	--	--	--	--	--	--	0.281	0.281	0.883	1.164	0.020	0.042
15"	3'-0"	2'-2"			3'-0"											0.281	0.281	0.963	1.244	0.031	0.047
18"	3'-0"	2'-2"			3'-3"											0.281	0.281	1.043	1.324	0.044	0.065
24"	3'-0"	2'-2"			3'-9"											0.281	0.281	1.204	1.485	0.078	0.121
30"	3'-0"	2'-2"	3'-4"		4'-3"	1'-2"	4'-4"	4	1'-6"	3	4'-1"	3	4'-1"	45	0.147	0.374	0.521	1.606	2.217	0.122	0.184
36"	3'-0"	2'-2"	3'-10"		4'-9"	1'-8"	4'-4"	4	2'-0"	4	4'-1"	3	4'-1"	49	0.187	0.415	0.602	1.914	2.516	0.176	0.261
42"	3'-0"	2'-2"		4'-5"	5'-3"	1'-5"	3'-6"	4	1'-9"	3	3'-3"	3	3'-3"	38	0.135	0.373	0.508	2.152	2.660	0.240	0.371
48"	3'-0"	2'-2"		5'-0"	5'-9"	2'-0"	3'-6"	4	2'-6"	4	3'-3"	3	3'-3"	41	0.173	0.410	0.583	2.415	2.998	0.313	0.477
54"	3'-0"	2'-2"		5'-7"	6'-3"	2'-7"	3'-6"	4	3'-0"	6	3'-3"	3	3'-3"	47	0.211	0.448	0.659	2.806	3.465	0.396	0.595

* RISER HAS .321 CUBIC YARDS OF BRICK MASONRY PER FOOT HEIGHT

NOTES: MORTAR JOINTS ½" +/- ⅛" THICK.
USE CLASS "B" CONCRETE THROUGHOUT.
USE FORMS FOR CONSTRUCTION OF THE BOTTOM SLAB.
DEDUCT FOR PIPE(S) FROM TOTAL CU. YDS. OF BRICK MASONRY.
USE #4 BAR DOWELS AT 12" CENTERS.
PROVIDE ALL CATCH BASINS OVER 3'-6" IN DEPTH WITH STEPS 12" ON CENTER. USE STEPS WHICH COMPLY WITH STD. DRAWING 840.66.
USE TYPE "E", "F" AND "G" GRATES UNLESS OTHERWISE INDICATED.
USE BRICK OR CONCRETE BLOCK WHICH COMPLIES WITH THE REQUIREMENTS OF SECTION 840 OF THE STANDARD SPECIFICATIONS.
IF REINFORCED CONCRETE PIPE IS SET IN BOTTOM SLAB OF BOX, ADD TO SLAB AS SHOWN ON STD. NO. 840.00.
FOR 8'-0" IN HEIGHT OR LESS, USE 8" WALL. OVER 8'-0" IN HEIGHT, USE 12" WALL TO 6'-0" FROM TOP OF WALL AND 8" WALL FOR THE REMAINING 6'-0". QUANTITIES TO BE ADJUSTED ACCORDINGLY.
CONSTRUCT WITH PIPE CROWNS MATCHING.
CHAMFER ALL EXPOSED CORNERS 1".
DRAWING NOT TO SCALE.

NCDOT STD. DETAIL 840.01
(CATCH BASIN BASE STRUCTURE)

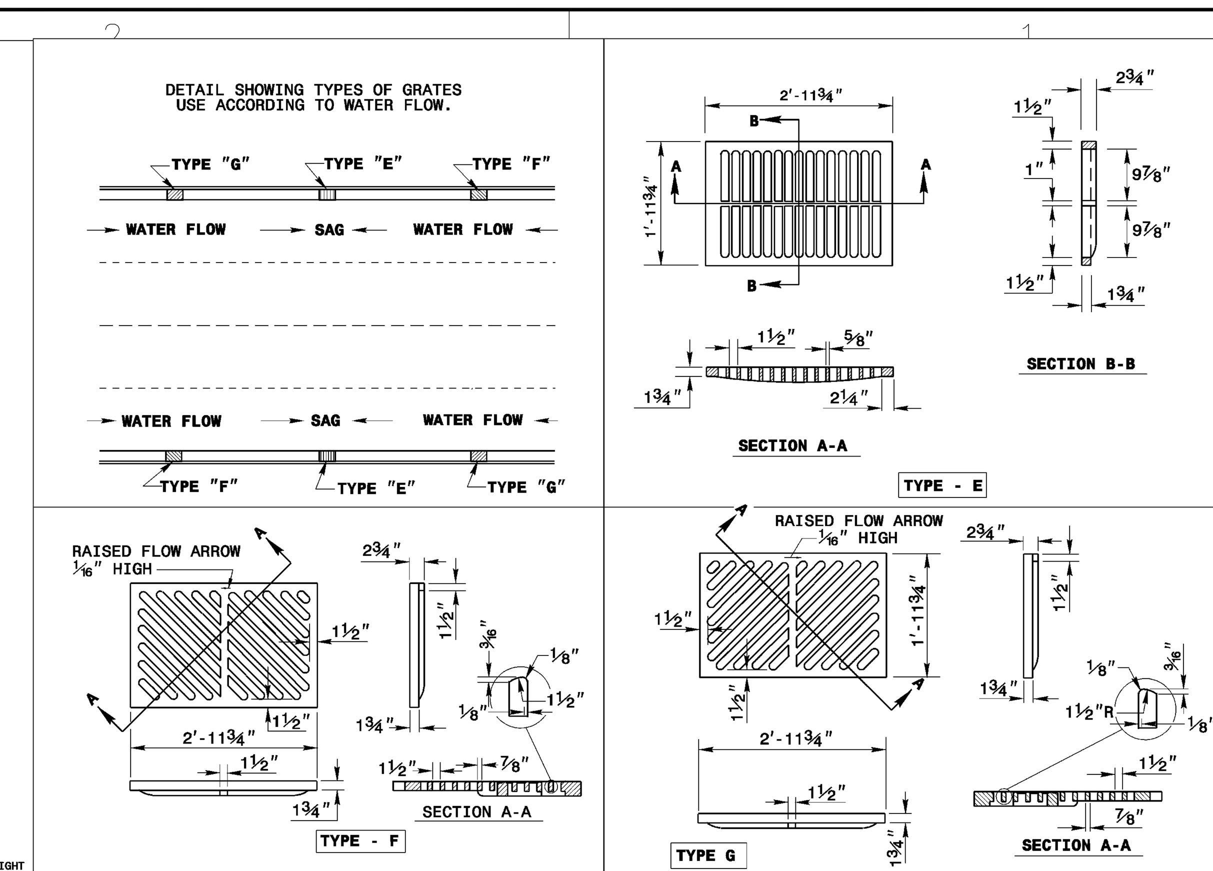

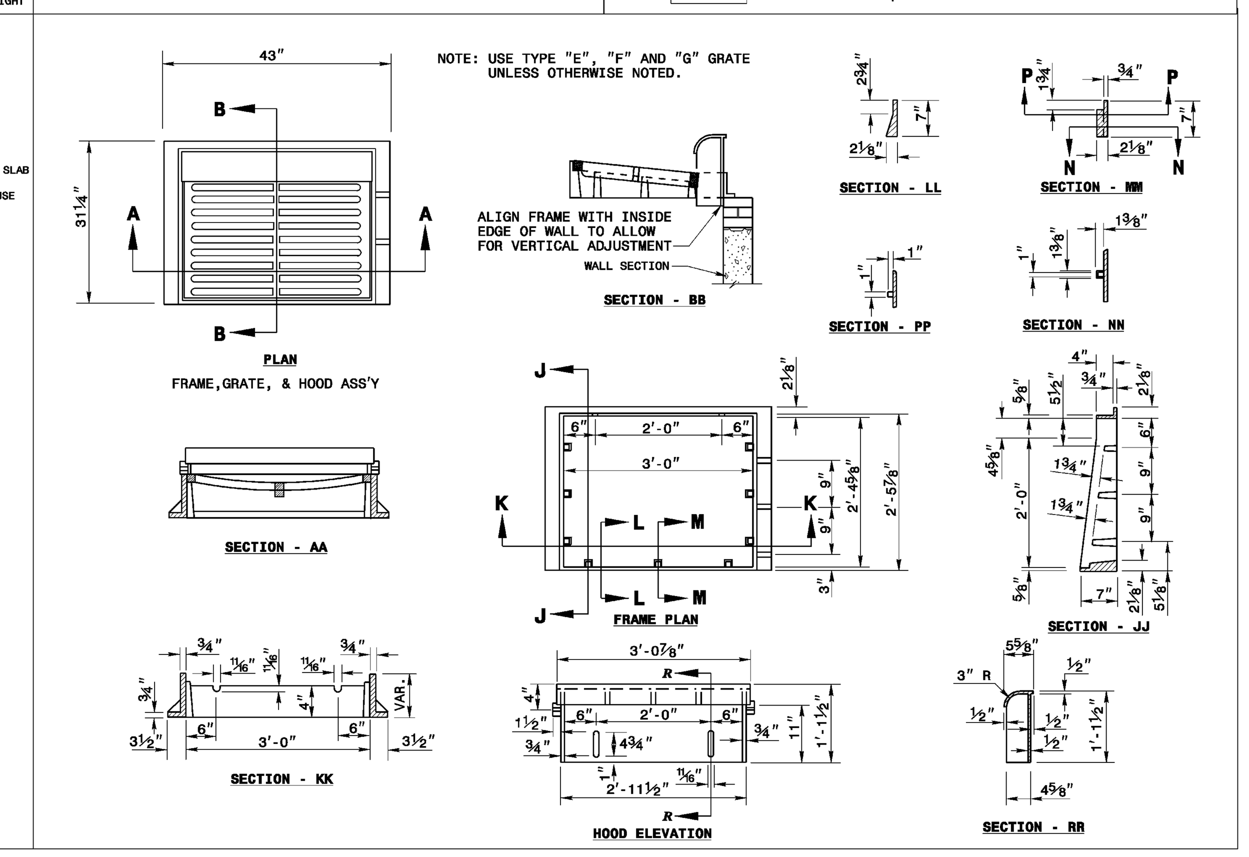

NCDOT STD. DETAIL 840.03
(FRAME, GRATE, AND HOOD)

C2 / C5201 **CATCH BASIN**
SCALE: N.T.S.

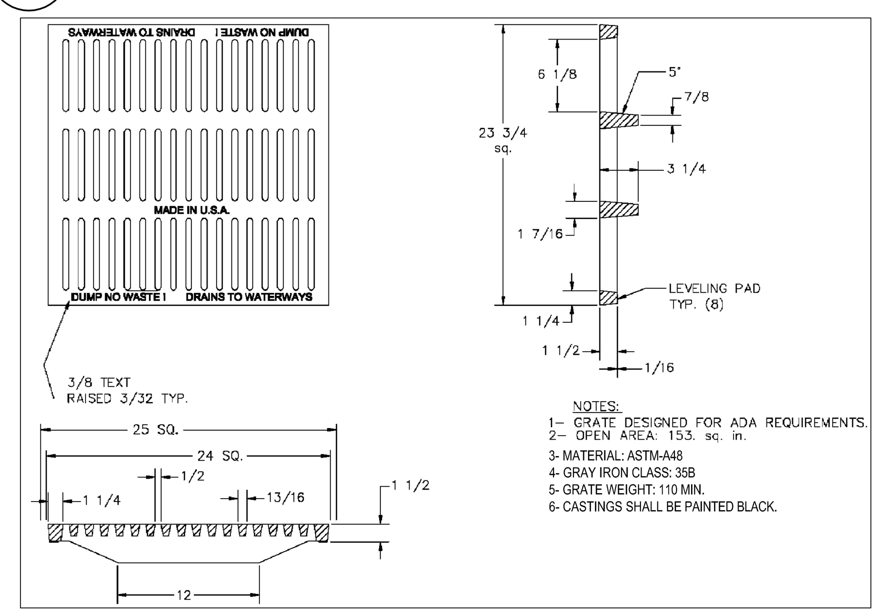

24" X 24" ADA CASTING

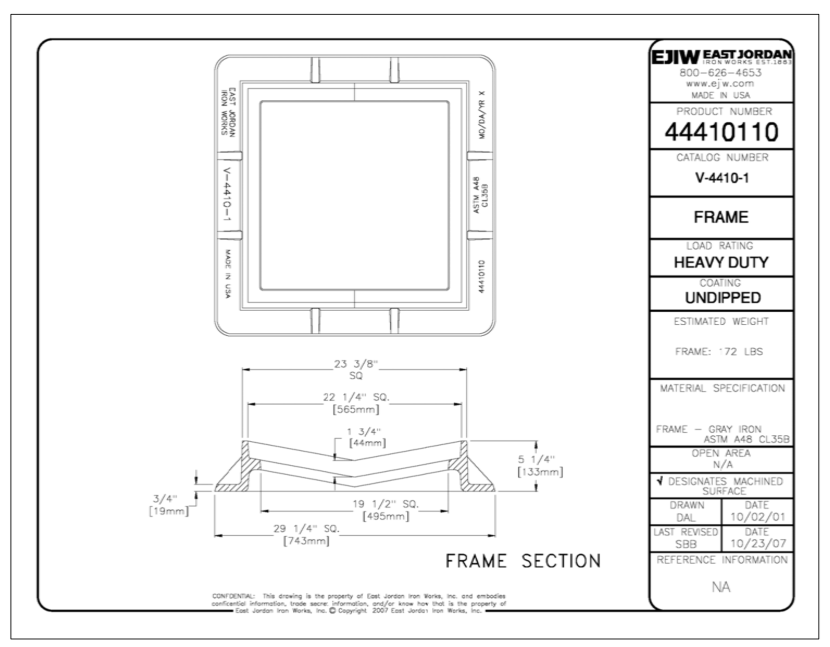

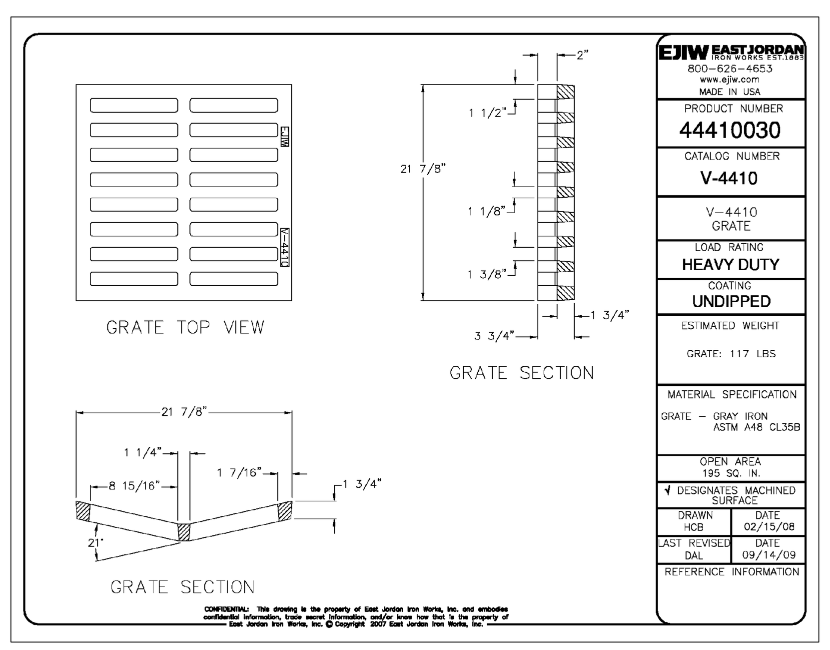

HEAVY–DUTY VALLEY GUTTER
DROP INLET FRAME & GRATE

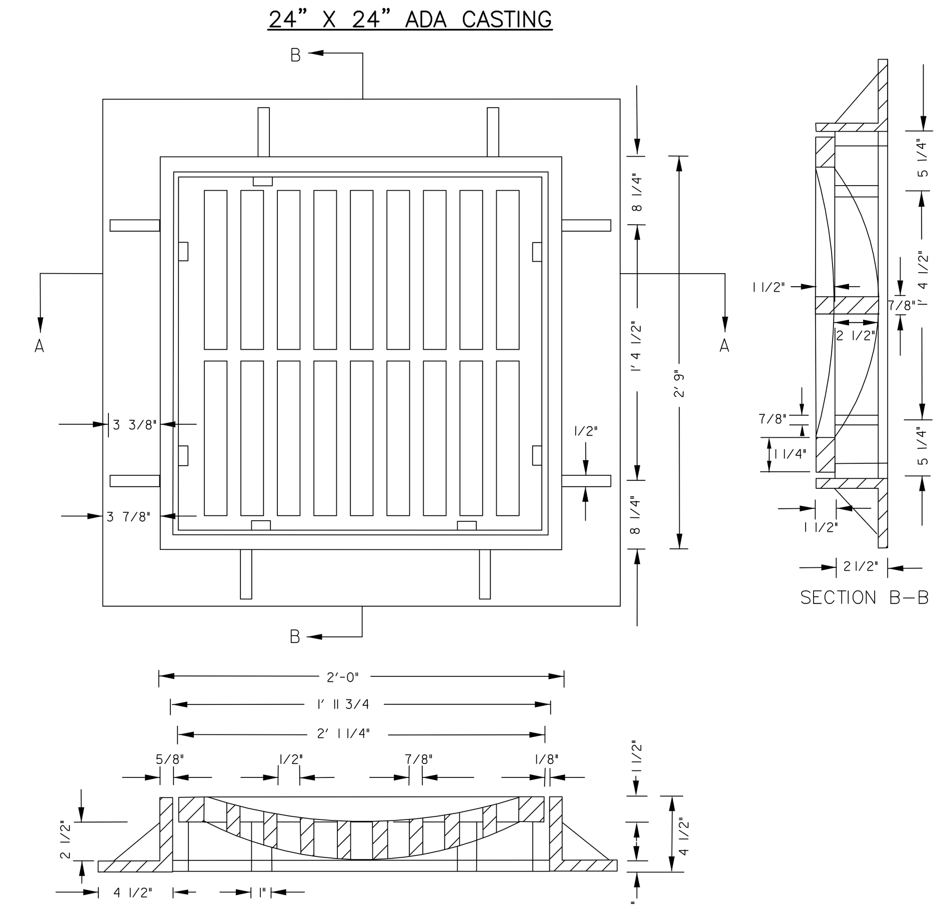

STANDARD 24" X 24" CASTING
(NON–ADA)

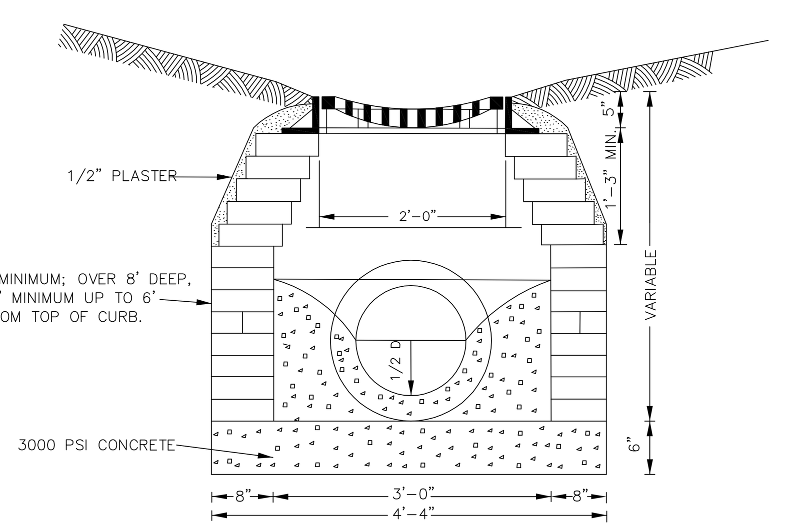

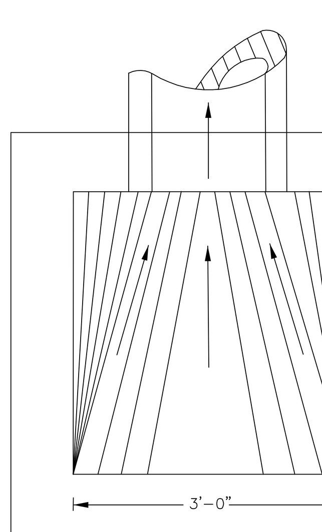

NOTES:
1. FOR 24" RCP & LARGER USE PIPE DIAMETER PLUS 12" FOR MINIMUM INSIDE DIMENSION.
2. 24" X 24" CASTING WITH 12", 15" & 18" PIPE, 24" X 36" CASTING USED WITH 24" PIPE OR LARGER. IF PLACED IN TRAFFIC, CASTING MUST BE TRAFFIC BEARING TYPE PER NCDOT STANDARDS.
3. STEPS PER NCDOT STD. 840.66 ARE REQUIRED WHEN STRUCTURE IS DEEPER THAN 42" (RIM – INVERT OUT).

A2 / C5201 **DROP INLET**
SCALE: N.T.S.

STORM DRAINAGE DETAILS

REVIEW DRAWING
NOT FOR CONSTRUCTION

BALLENTINE ASSOCIATES, P.A.
221 PROVIDENCE ROAD, CHAPEL HILL, N.C. 27514
(919) 929 – 0481 (919) 489 – 4789

COPYRIGHT © 2017 BALLENTINE ASSOCIATES, P.A. THIS DOCUMENT IS THE PROPERTY OF BALLENTINE ASSOCIATES, P.A. ALL RIGHTS RESERVED. ANY REPRODUCTION OF THIS DOCUMENT OR POSSESSION WITHOUT PRIOR PERMISSION OF BALLENTINE ASSOCIATES, P.A. WILL BE SUBJECT TO LEGAL ACTION.

Ballentine Associates, P.A. CORPORATE SEAL C328 NORTH CAROLINA Chapel Hill

NORTH CAROLINA PROFESSIONAL ENGINEER SEAL 042542 DILLON W. SMITH 28 JUN 17

NUM	REVISIONS	DATE
1	PER E-F FDP REVIEW COMMENTS	28 JUN 17

OWNER INFORMATION
RAM REALTY ADVISORS
1930 CAMDEN RD.
CHARLOTTE, NC 28203

OWNERS REPRESENTATIVE:
DAVID KLEPSER
PH. (704) 377-8773
FAX (704) 377-6920
EMAIL dklepser@ramrealestate.com

DATE	ISSUED
21 APR 17	E-F FDP SUBMITTAL #1
28 JUN 17	E-F FDP SUBMITTAL #2

FORDHAM BLVD. APARTMENTS
CHAPEL HILL, NORTH CAROLINA
E-F FORM DISTRICT PERMIT DRAWINGS

JOB #: 116026.00
DATE: 21 APR 17
SCALE: AS NOTED
DRAWN BY: D.W.S.
REVIEWED BY: G.J.R.

SHEET
C5201

N:\Projects\116026.00 Fordham Blvd Apartments\1__Dwg\BA-Model Files\C5201-SD Details-Fordham.dwg, 6/27/2017 9:49:10 PM, franke

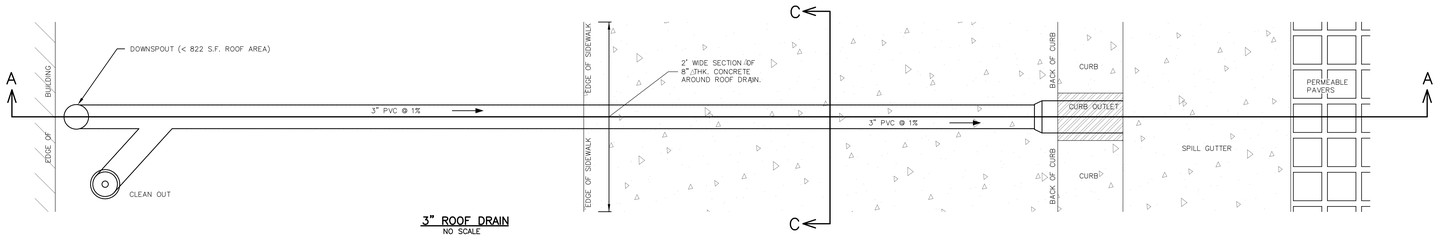

3" ROOF DRAIN
NO SCALE

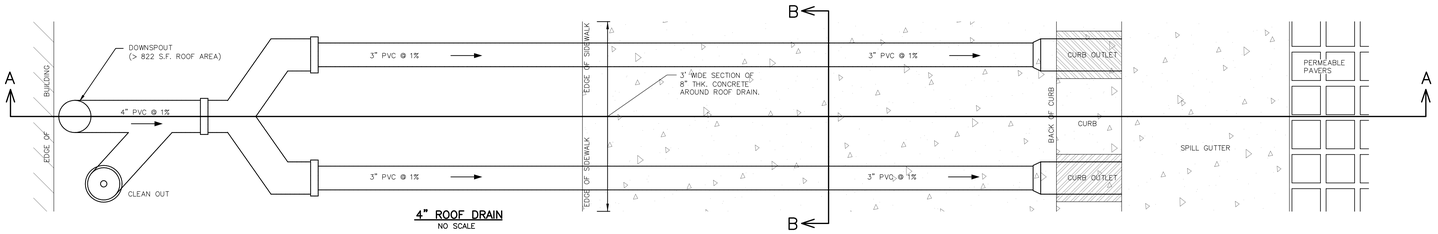

4" ROOF DRAIN
NO SCALE

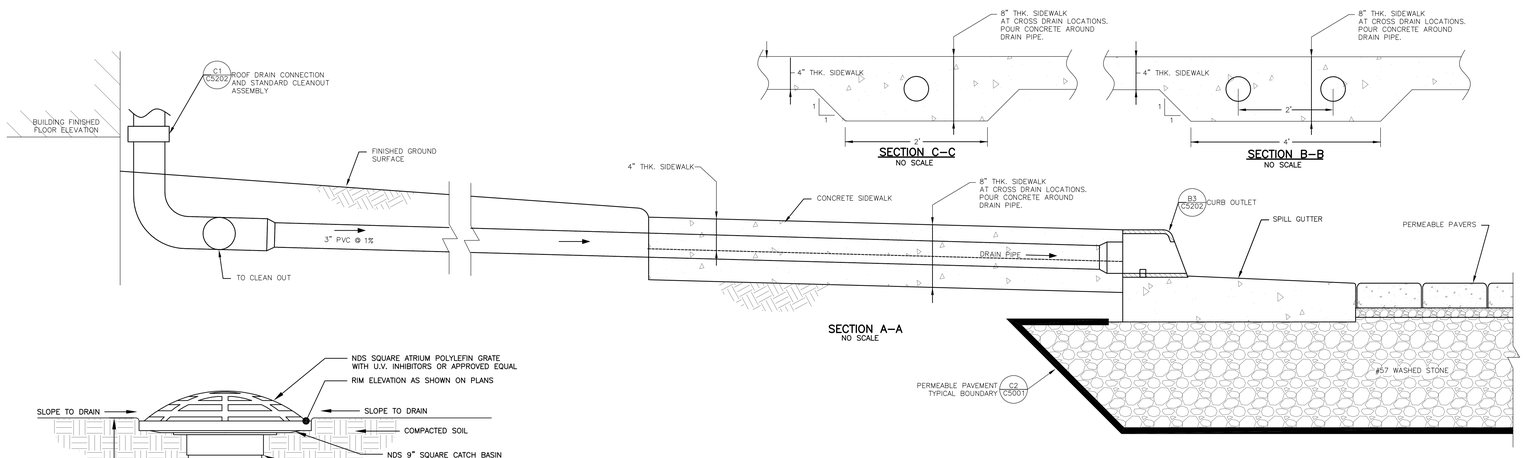

SECTION A–A
NO SCALE

B4 C5202 ROOF DRAIN THROUGH CURB & GUTTER
SCALE: N.T.S.

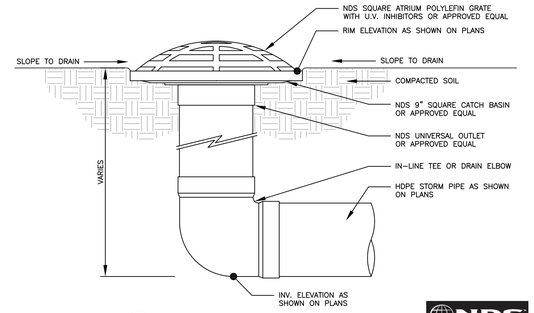

D1 C5202 NDS DRAIN WITH ATRIUM GRATE
SCALE: N.T.S.

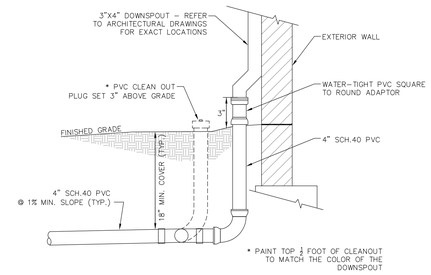

C1 C5202 ROOF DRAIN CONNECTION & STD. CLEANOUT ASSEMBLY
SCALE: N.T.S.

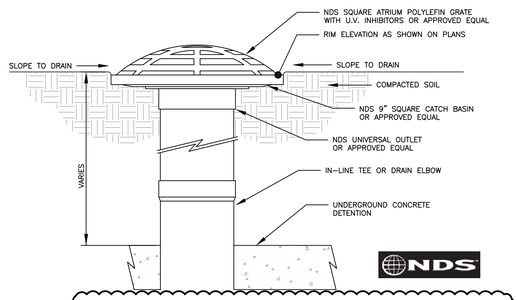

1 B5 C5202 NDS DRAIN INTO UNDERGROUND DETENTION
SCALE: N.T.S.

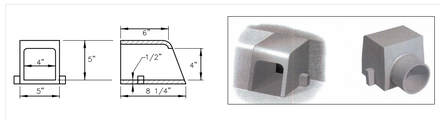

B3 C5202 ROOF DRAIN CURB OUTLET
N.T.S.

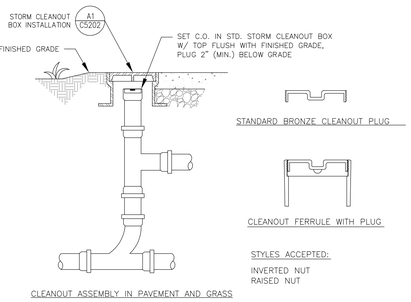

B1 C5202 STD. STORM CLEANOUT ASSEMBLY
N.T.S.

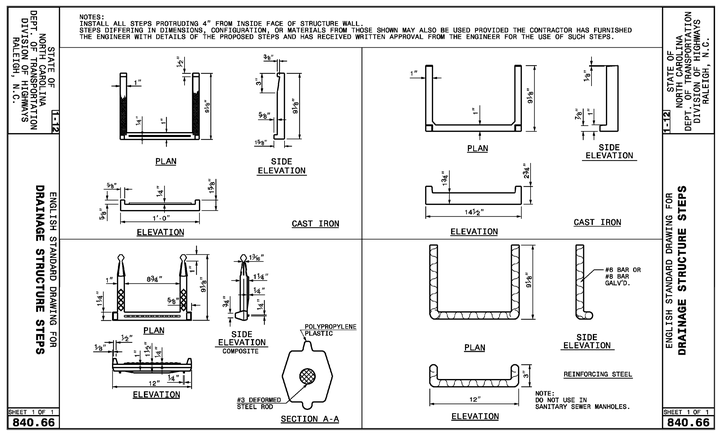

A5 C5202 DRAINAGE STUCTURE STEPS
SCALE: N.T.S.

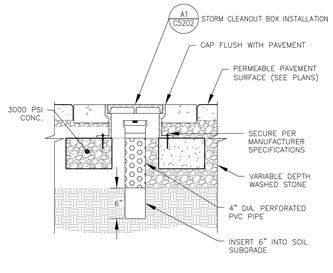

A4 C5202 OBSERVATION WELL
SCALE: 1" = 1'

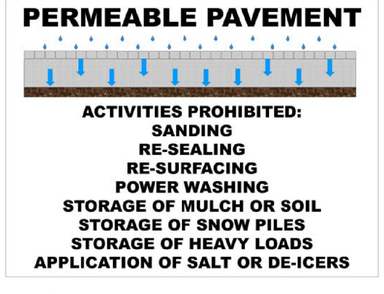

A3 C5202 PERMEABLE PAVEMENT SIGN
N.T.S.

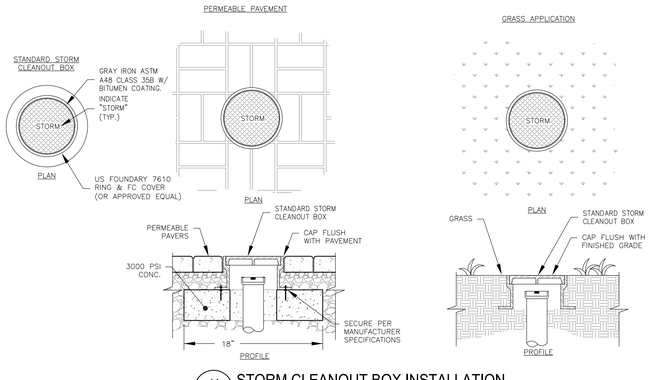

A1 C5202 STORM CLEANOUT BOX INSTALLATION
SCALE: N.T.S.

STORM DRAINAGE DETAILS

REVIEW DRAWING
NOT FOR CONSTRUCTION

BALLENTINE ASSOCIATES, P.A.
221 PROVIDENCE ROAD, CHAPEL HILL, N.C. 27514
(919) 923 – 0481 (919) 489 – 4789

COPYRIGHT © 2017 BALLENTINE ASSOCIATES, P.A. THIS DOCUMENT IS THE PROPERTY OF BALLENTINE ASSOCIATES, P.A. ALL RIGHTS RESERVED. ANY REPRODUCTION OF THIS DOCUMENT OR POSSESSION WITHOUT PRIOR PERMISSION OF BALLENTINE ASSOCIATES, P.A. WILL BE SUBJECT TO LEGAL ACTION.

Ballentine Associates, P.A. CORPORATE SEAL C328 NORTH CAROLINA Chapel Hill

NORTH CAROLINA PROFESSIONAL SEAL 042542 ENGINEER DILLON W. SMITH

NUM	REVISIONS	DATE
A	PER E–F FDP REVIEW COMMENTS	28 JUN 17

ISSUED	DATE
E–F FDP SUBMITTAL #1	21 APR 17
E–F FDP SUBMITTAL #2	28 JUN 17

OWNER INFORMATION
RAM REALTY ADVISORS
1930 CAMDEN RD.
CHARLOTTE, NC 28203

OWNERS REPRESENTATIVE:
DAVID KLEPSER
PH. (704) 377–8773
FAX (704) 377–6920
EMAIL dklepser@ramrealty.com

FORDHAM BLVD. APARTMENTS
CHAPEL HILL, NORTH CAROLINA

E-F FORM DISTRICT PERMIT DRAWINGS

JOB #: 116026.00
DATE: 21 APR 17
SCALE: AS NOTED
DRAWN BY: D.W.S.
REVIEWED BY: G.J.R.

SHEET
C5202

N:\Projects\116026.00 Fordham Blvd Apartments\1__Dwg\BA-Model Files\C5201-SD Details-Fordham.dwg, 6/27/2017 11:36:01 PM, LeeP

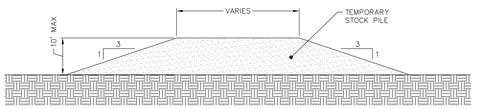

NOTES:

1. TEMPORARY STOCK PILES SHALL HAVE A MAXIMUM HEIGHT OF 10' WITH SIDE SLOPES NO STEEPER THAN 3:1.
2. ESTABLISH TEMPORARY GROUND COVER WITHIN 14 DAYS AS DEPICTED ON THE GROUND STABILIZATION REQUIREMENTS CHART ON SHEET C1301.

C5 / C5301 TEMPORARY STOCKPILE AREA DETAIL
N.T.S.

NOTE:

1. STRUCTURAL STONE SHALL BE (CLASS "B") STONE FOR EROSION CONTROL PURPOSES.
2. SEDIMENT CONTROL STONE SHALL BE NO. 5 OR NO. 57 STONE.

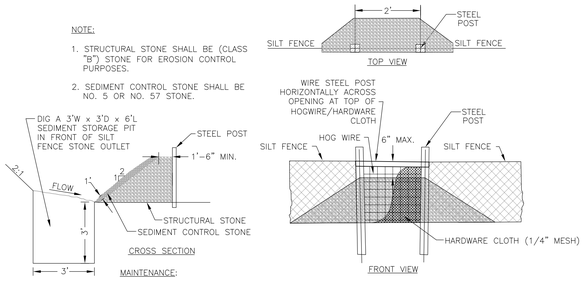

MAINTENANCE:

- INSPECT SILT FENCE STONE OUTLET AT LEAST ONCE A WEEK AND AFTER EACH RAINFALL. MAKE ANY REQUIRED REPAIRS IMMEDIATELY.
- REMOVE SEDIMENT DEPOSITS AS NECESSARY, RESTORE TO ITS ORIGINAL DIMENSIONS AND REPLACE STONE THAT IS IMPAIRED BY SEDIMENT.

C4 / C5301 TEMPORARY SILT FENCE STONE OUTLET
N.T.S.

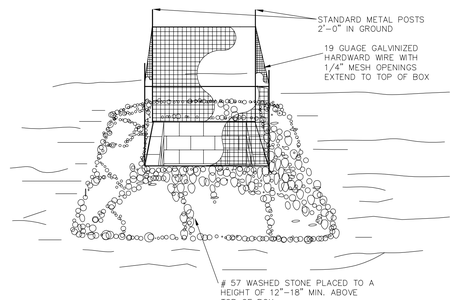

C2 / C5301 TEMPORARY INLET PROTECTION
N.T.S.

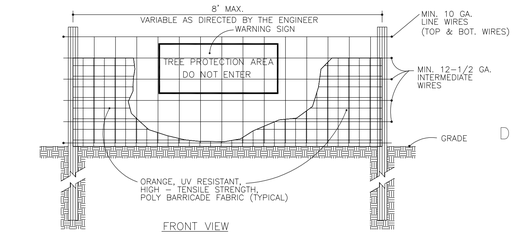

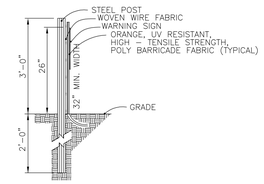

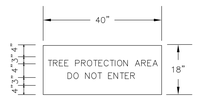

NOTES:

1. WARNING SIGNS TO BE MADE OF DURABLE, WEATHERPROOF MATERIAL.
2. LETTERS TO BE 3" HIGH MINIMUM, CLEARLY LEGIBLE AND SPACED AS DETAILED.
3. SIGNS SHALL BE PLACED AT 50' MAXIMUM INTERVALS.
4. PLACE A SIGN AT EACH END OF LINEAR TREE PROTECTION AND 50' ON CENTER THEREAFTER.
5. FOR TREE PROTECTION AREAS LESS THAN 200' IN PERIMETER, PROVIDE NO LESS THAN ONE SIGN PER PROTECTION AREA.
6. ATTACH SIGNS SECURELY TO FENCE POSTS AND FABRIC.
7. MAINTAIN TREE PROTECTION FENCE THROUGHOUT DURATION OF PROJECT.
8. ADDITIONAL SIGNS MAY BE REQUIRED BY TOWN OF ARDEN INSPECTIONS DEPARTMENT BASED ON ACTUAL FIELD CONDITIONS.
9. PLACE A SIGN AT EACH END OF LINEAR TREE PROTECTION AND 50' ON CENTER THEREAFTER.

C1 / C5301 TEMPORARY TREE PROTECTION FENCE
N.T.S.

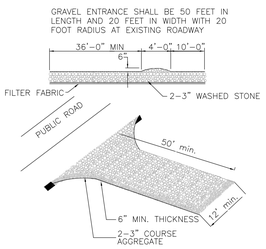

GRAVEL ENTRANCE SHALL BE 50 FEET IN LENGTH AND 20 FEET IN WIDTH WITH 20 FOOT RADIUS AT EXISTING ROADWAY

DESIGN CRITERIA

AGGREGATE SIZE – USE 2-3 INCH WASHED STONE

DIMENSION OF GRAVEL PAD

THICKNESS – 6 INCHES MINIMUM

WIDTH – 12 FT. MINIMUM OR FULL WIDTH AT ACCESS POINTS OF THE VEHICULAR ENTRANCE AND EXIT AREA, WHICHEVER IS GREATER

LENGTH – 50 FT. MINIMUM.

LOCATION – LOCATE CONSTRUCTION ENTRANCES AND EXITS TO LIMIT SEDIMENT FROM LEAVING THE SITE AND TO PROVIDE FOR MAXIMUM UTILITY BY ALL CONSTRUCTION VEHICLES. AVOID STEEP GRADES AND ENTRANCES AT CURVES IN PUBLIC ROADS.

CONTRACTOR SHALL INSTALL ADDITIONAL GRAVEL CONSTRUCTION ENTRANCES NOT INDICATED ON THE PLANS REQUIRED FOR STAGING AND/OR BORROW AREAS AND MAINTAIN AT NO ADDITIONAL EXPENSE TO THE OWNER.

CONTRACTOR SHALL SUPPLEMENT AND MAINTAIN GRAVEL CONSTRUCTION ENTRANCES AT HIS EXPENSE UNTIL FINAL ACCEPTANCE.

MAINTENANCE:

MAINTAIN THE GRAVEL PAD IN A CONDITION TO PREVENT MUD OR SEDIMENT FROM LEAVING THE CONSTRUCTION SITE. THIS MAY REQUIRE PERIODIC TOPDRESSING WITH 2-INCH STONE. AFTER EACH RAINFALL, INSPECT ANY STRUCTURE USED TO TRAP SEDIMENT AND CLEAN IT OUT AS NECESSARY. IMMEDIATELY REMOVE ALL OBJECTIONABLE MATERIALS SPILLED, WASHED, OR TRACKED ONTO PUBLIC ROADWAYS.

A5 / C5301 TEMPORARY CONSTRUCTION ENTRANCE
N.T.S.

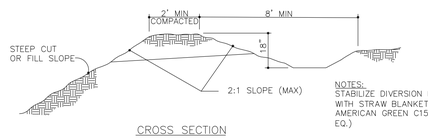

NOTES:
STABILIZE DIVERSION DITCHES WITH STRAW BLANKET (NORTH AMERICAN GREEN C150 OR EQ.)

CROSS SECTION

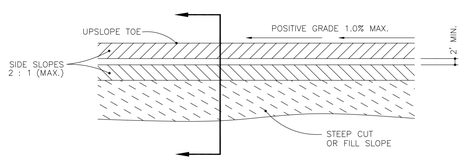

PLAN VIEW

DIV. DITCH	"A"	"B"	"C"	"D"	LINING	COMMENTS
1.1	8' MIN.	18" MIN.	2'	1.0'	STRAW BLANKET	N.A. GREEN S150

MAINTENANCE:

INSPECT TEMPORARY DIVERSIONS ONCE A WEEK AND AFTER EVERY RAINFALL. IMMEDIATELY REMOVE SEDIMENT FROM THE FLOW AREA AND REPAIR THE DIVERSION RIDGE. CAREFULLY CHECK OUTLETS AND MAKE TIMELY REPAIRS AS NEEDED. WHEN THE AREA PROTECTED IS PERMANENTLY STABILIZED, REMOVE THE RIDGE AND THE CHANNEL TO BLEND WITH THE NATURAL GROUND LEVEL AND APPROPRIATELY STABILIZE IT.

A4 / C5301 TEMPORARY DIVERSION DITCH
N.T.S.

APRON LOCATION	"do" (ft.)	"La"	"W1" (ft.)	"W2" (ft.)	RIPRAP CLASS	"d" (in.)	COMMENTS
UD OUT #1	2.0	10	6.0	8.0	B	18	
#16	1.25	5	4.0	6.0	A	18	
#23	0.5	5	4.0	6.0	A	18	

NOTE: FILTER FABRIC SHALL BE INSTALLED UNDER ALL RIPRAP ON THIS PROJECT

NCDOT GRADATION TABLE
ACCEPTANCE CRITERIA FOR RIPRAP
AND STONE FOR EROSION CONTROL
REQUIRED STONE SIZES – INCHES

CLASS	MINIMUM	MIDRANGE	MAXIMUM
A	2	4	6
B	5	8	12
1	5	10	17
2	9	14	23r

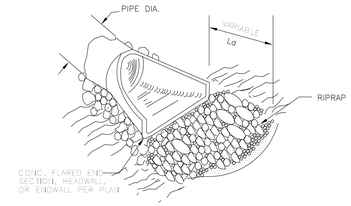

ISOMETRIC VIEW

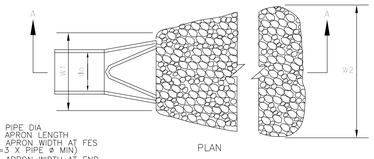

PLAN

do = PIPE DIA
La = APRON LENGTH
W1 = APRON WIDTH AT FES (=3 X PIPE ø MIN)
W2 = APRON WIDTH AT END
FOR FLAT AREA: W2 = do + La
FOR CHANNEL : W2 = do + 0.4 La
d = APRON DEPTH

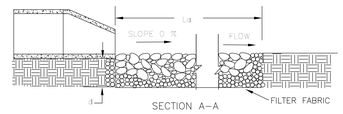

SECTION A–A

MAINTENANCE:

INSPECT RIPRAP OUTLET STRUCTURES WEEKLY AND AFTER SIGNIFICANT (1/2 INCH OR GREATER) RAINFALL EVENTS TO SEE IF ANY EROSION AROUND OR BELOW THE RIPRAP HAS TAKEN PLACE, OR IF STONES HAVE BEEN DISLODGED. IMMEDIATELY MAKE ALL NEEDED REPAIRS TO PREVENT FURTHER DAMAGE.

A2 / C5301 RIP RAP APRON
N.T.S.

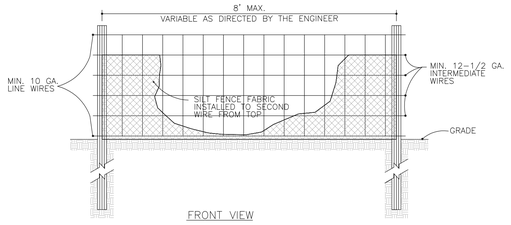

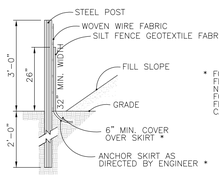

* FOR REPAIR OF SILT FENCE FAILURES, USE No. 57 WASHED STONE FOR ANCHOR WHEN SILT FENCE IS PROTECTING CATCH BASIN.

SIDE VIEW

NOTE:

–USE SILT FENCE ONLY WHEN DRAINAGE AREA DOES NOT EXCEED 1/4 ACRE AND NEVER IN AREAS OF CONCENTRATED FLOW

–END OF SILT FENCE NEEDS TO BE TURNED UPHILL.

MAINTENANCE:

- INSPECT SEDIMENT FENCES AT LEAST ONCE A WEEK AND AFTER EACH RAINFALL. MAKE ANY REQUIRED REPAIRS IMMEDIATELY.
- SHOULD THE FABRIC OF A SEDIMENT FENCE COLLAPSE, TEAR, DECOMPOSE OR BECOME INEFFECTIVE, REPLACE IT PROMPTLY.
- REMOVE SEDIMENT DEPOSITS AS NECESSARY TO PROVIDE ADEQUATE STORAGE VOLUME FOR THE NEXT RAIN AND TO REDUCE PRESSURE ON THE FENCE. TAKE CARE TO AVOID UNDERMINING THE FENCE DURING CLEANOUT.
- REMOVE ALL FENCING MATERIALS AND UNSTABLE SEDIMENT DEPOSITS AND BRING THE AREA TO GRADE AND STABILIZE IT AFTER THE CONTRIBUTING DRAINAGE AREA HAS BEEN PROPERLY STABILIZED.

A1 / C5301 TEMPORARY SILT FENCE
N.T.S.

EROSION CONTROL DETAILS

REVIEW DRAWING
NOT FOR CONSTRUCTION

BALLENTINE ASSOCIATES, P.A.
221 PROVIDENCE ROAD, CHAPEL HILL, N.C. 27514
(919) 929 – 0481 (919) 489 – 4789

COPYRIGHT © 2017
BALLENTINE ASSOCIATES, P.A.
THIS DOCUMENT IS THE PROPERTY OF BALLENTINE ASSOCIATES, P.A. ALL RIGHTS RESERVED. ANY REPRODUCTION OF THIS DOCUMENT OR POSSESSION WITHOUT PRIOR PERMISSION OF BALLENTINE ASSOCIATES, P.A. WILL BE SUBJECT TO LEGAL ACTION.

Ballentine Associates, P.A. CORPORATE SEAL C328 NORTH CAROLINA Chapel Hill

NORTH CAROLINA PROFESSIONAL SEAL 042542 ENGINEER DILLON W. SMITH 28 JUN 17

NUM	REVISIONS	DATE
A	PER E-F FDP REVIEW COMMENTS	28 JUN 17

OWNER INFORMATION
RAM REALTY ADVISORS
1930 CAMDEN RD.
CHARLOTTE, NC 28203

OWNERS REPRESENTATIVE:
DAVID KLEPSER
PH. (704) 377-8773
FAX (704) 377-6920
EMAIL [illegible]

ISSUED	DATE
E-F FDP SUBMITTAL #1	21 APR 17
E-F FDP SUBMITTAL #2	28 JUN 17

FORDHAM BLVD. APARTMENTS
CHAPEL HILL, NORTH CAROLINA

E-F FORM DISTRICT PERMIT DRAWINGS

JOB #: 116026.00
DATE: 21 APR 17
SCALE: AS NOTED
DRAWN BY: D.W.S.
REVIEWED BY: G.J.R.

SHEET
C5301

N:\Projects\116026.00 Fordham Blvd Apartments\1_Dwg\BA-Model Files\C5301-EC Details-Fordham.dwg, 6/27/2017 9:45:26 PM, frankie

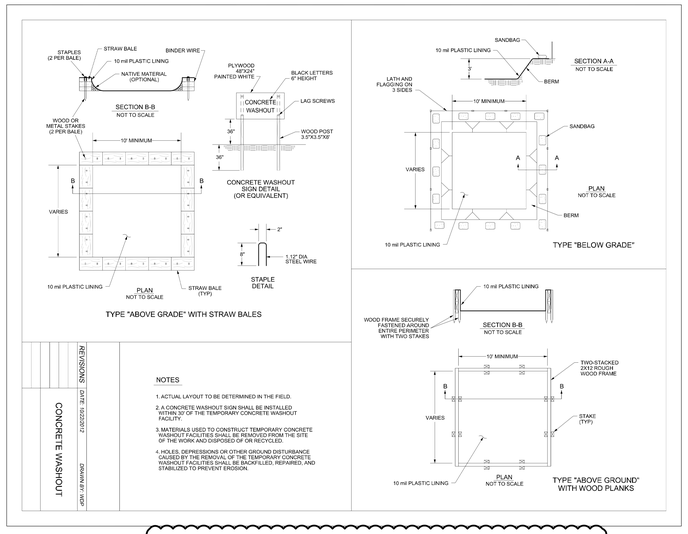

NOTES

1. ACTUAL LAYOUT TO BE DETERMINED IN THE FIELD.
2. A CONCRETE WASHOUT SIGN SHALL BE INSTALLED WITHIN 50' OF THE TEMPORARY CONCRETE WASHOUT FACILITY.
3. MATERIALS USED TO CONSTRUCT TEMPORARY CONCRETE WASHOUT FACILITIES SHALL BE REMOVED FROM THE SITE OF THE WORK AND DISPOSED OF OR RECYCLED.
4. HOLES, DEPRESSIONS OR OTHER GROUND DISTURBANCE CAUSED BY THE REMOVAL OF THE TEMPORARY CONCRETE WASHOUT FACILITIES SHALL BE BACKFILLED, REPAIRED, AND STABILIZED TO PREVENT EROSION.

C4 / C5302 CONCRETE WASHOUT
N.T.S.

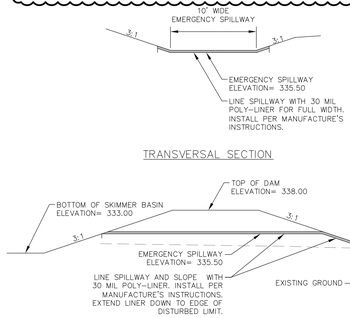

B4 / C5302 EMERGENCY SPILLWAY SECTIONS
N.T.S.

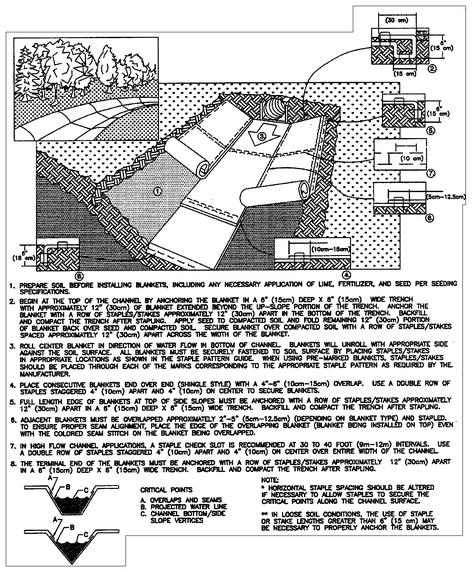

1. PREPARE SOIL BEFORE INSTALLING BLANKETS, INCLUDING ANY NECESSARY APPLICATION OF LIME, FERTILIZER, AND SEED PER SEEDING SPECIFICATIONS.
2. BEGIN AT THE TOP OF THE CHANNEL BY ANCHORING THE BLANKET IN A 6" (15cm) DEEP X 6" (15cm) WIDE TRENCH WITH APPROXIMATELY 12" (30cm) OF BLANKET EXTENDED BEYOND THE UP-SLOPE PORTION OF THE TRENCH. ANCHOR THE BLANKET WITH A ROW OF STAPLES/STAKES APPROXIMATELY 12" (30cm) APART IN THE BOTTOM OF THE TRENCH. BACKFILL AND COMPACT THE TRENCH AFTER STAPLING. APPLY SEED TO COMPACTED SOIL AND FOLD REMAINING 12" (30cm) PORTION OF BLANKET BACK OVER SEED AND COMPACTED SOIL. SECURE BLANKET OVER COMPACTED SOIL WITH A ROW OF STAPLES/STAKES SPACED APPROXIMATELY 12" (30cm) APART ACROSS THE WIDTH OF THE BLANKET.
3. ROLL CENTER BLANKET IN DIRECTION OF WATER FLOW IN BOTTOM OF CHANNEL. BLANKETS WILL UNROLL WITH APPROPRIATE SIDE AGAINST THE SOIL SURFACE. ALL BLANKETS MUST BE SECURELY FASTENED TO SOIL SURFACE BY PLACING STAPLES/STAKES IN APPROPRIATE LOCATIONS AS SHOWN IN THE STAPLE PATTERN GUIDE. WHEN USING PRE-MARKED BLANKETS, STAPLES/STAKES SHOULD BE PLACED THROUGH EACH OF THE MARKS CORRESPONDING TO THE APPROPRIATE STAPLE PATTERN AS REQUIRED BY THE MANUFACTURER.
4. PLACE CONSECUTIVE BLANKETS END OVER END (SHINGLE STYLE) WITH A 4"-6" (10cm-15cm) OVERLAP. USE A DOUBLE ROW OF STAPLES STAGGERED 4" (10cm) APART AND 4" (10cm) ON CENTER TO SECURE BLANKETS.
5. FULL LENGTH EDGE OF BLANKETS AT TOP OF SIDE SLOPES MUST BE ANCHORED WITH A ROW OF STAPLES/STAKES APPROXIMATELY 12" (30cm) APART IN A 6" (15cm) DEEP X 6" (15cm) WIDE TRENCH. BACKFILL AND COMPACT THE TRENCH AFTER STAPLING.
6. ADJACENT BLANKETS MUST BE OVERLAPPED APPROXIMATELY 2"-5" (5cm-12.5cm) (DEPENDING ON BLANKET TYPE) AND STAPLED. TO ENSURE PROPER SEAM ALIGNMENT, PLACE THE EDGE OF THE OVERLAPPING BLANKET (BLANKET BEING INSTALLED ON TOP) EVEN WITH THE COLORED SEAM STITCH ON THE BLANKET BEING OVERLAPPED.
7. IN HIGH FLOW CHANNEL APPLICATIONS, A STAPLE CHECK SLOT IS RECOMMENDED AT 30 TO 40 FOOT (9m-12m) INTERVALS. USE A DOUBLE ROW OF STAPLES STAGGERED 4" (10cm) APART AND 4" (10cm) ON CENTER OVER ENTIRE WIDTH OF THE CHANNEL.
8. THE TERMINAL END OF THE BLANKETS MUST BE ANCHORED WITH A ROW OF STAPLES/STAKES APPROXIMATELY 12" (30cm) APART IN A 6" (15cm) DEEP X 6" (15cm) WIDE TRENCH. BACKFILL AND COMPACT THE TRENCH AFTER STAPLING.

CRITICAL POINTS
A. OVERLAPS AND SEAMS
B. PROJECTED WATER LINE
C. CHANNEL BOTTOM/SIDE SLOPE VERTICES

NOTE:
* HORIZONTAL STAPLE SPACING SHOULD BE ALTERED IF NECESSARY TO ALLOW STAPLES TO SECURE THE CRITICAL POINTS ALONG THE CHANNEL SURFACE.

** IN LOOSE SOIL CONDITIONS, THE USE OF STAPLE OR STAKE LENGTHS GREATER THAN 6" (15 cm) MAY BE NECESSARY TO PROPERLY ANCHOR THE BLANKETS.

MAINTENANCE:

- INSPECT ROLLED EROSION CONTROL PRODUCTS (RECP) AT LEAST WEEKLY AND AFTER EACH SIGNIFICANT (¼ INCH OR GREATER) RAIN FALL EVENT REPAIR IMMEDIATELY.
- GOOD CONTACT WITH THE GROUND MUST BE MAINTAINED, AND EROSION MUST NOT OCCUR BENEATH THE RECP.
- ANY AREAS OF THE RECP THAT ARE DAMAGED OR NOT IN CLOSE CONTACT WITH THE GROUND SHALL BE REPAIRED AND STAPLED.
- IF EROSION OCCURS DUE TO POORLY CONTROLLED DRAINAGE, THE PROBLEM SHALL BE FIXED AND THE ERODED AREA PROTECTED.
- MONITOR AND REPAIR THE RECP AS NECESSARY UNTIL GROUND COVER IS ESTABLISHED.

A4 / C5302 EROSION CONTROL MATTING INSTALLATION (TYP.)
N.T.S.

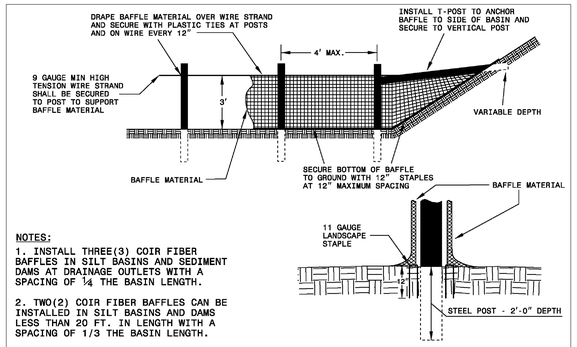

NOTES:

1. INSTALL THREE(3) COIR FIBER BAFFLES IN SILT BASINS AND SEDIMENT DAMS AT DRAINAGE OUTLETS WITH A SPACING OF ¼ THE BASIN LENGTH.

2. TWO(2) COIR FIBER BAFFLES CAN BE INSTALLED IN SILT BASINS AND DAMS LESS THAN 20 FT. IN LENGTH WITH A SPACING OF 1/3 THE BASIN LENGTH.

3. TOP HEIGHT OF COIR FIBER BAFFLES SHALL NOT BE BELOW BASE OF EMERGENCY SPILLWAY ELEVATION.

MAINTENANCE:

- INSPECT BAFFLES AT LEAST ONCE A WEEK AND AFTER EACH RAINFALL. MAKE ANY REQUIRED REPAIRS IMMEDIATELY.
- BE SURE TO MAINTAIN ACCESS TO THE BAFFLES. SHOULD THE FABRIC OF A BAFFLE COLLAPSE, TEAR, DECOMPOSE, OR BECOME INEFFECTIVE, REPLACE IT PROMPTLY.
- REMOVE SEDIMENT DEPOSITS WHEN IT REACHES HALF FULL TO PROVIDE ADEQUATE STORAGE VOLUME FOR THE NEXT RAIN AND TO REDUCE PRESSURE ON THE BAFFLES. TAKE CARE TO AVOID DAMAGING THE BAFFLES DURING CLEANOUT. SEDIMENT DEPTH SHOULD NEVER EXCEED HALF THE DESIGNED STORAGE DEPTH.
- AFTER THE CONTRIBUTING DRAINAGE AREA HAS BEEN PROPERLY STABILIZED, REMOVE ALL BAFFLE MATERIALS AND UNSTABLE SEDIMENT DEPOSITS, BRING THE AREA TO GRADE, AND STABILIZE IT.

C3 / C5302 TEMPORARY COIR MESH BAFFLE INSTALLATION
N.T.S.

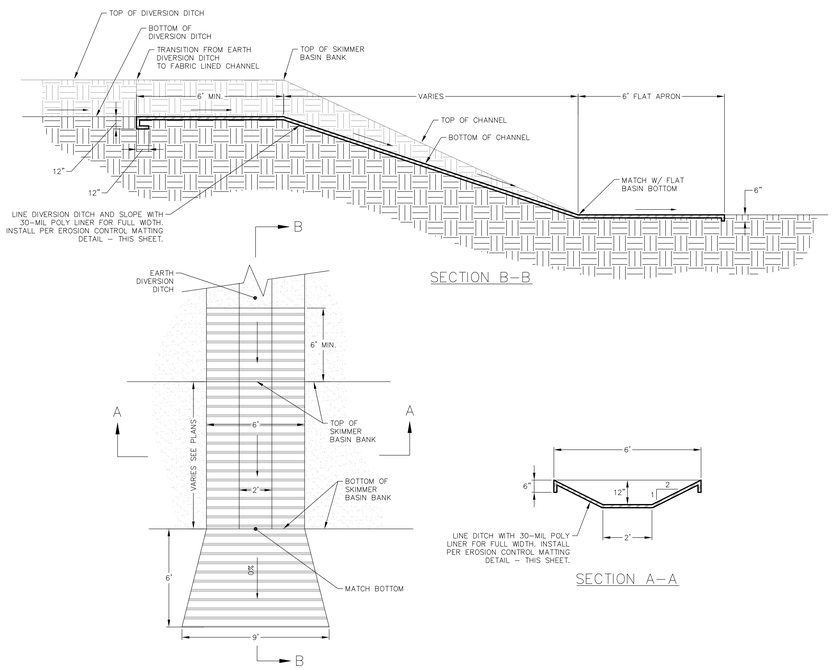

A3 / C5302 DIVERSION DITCH OUTLET AT SKIMMER BASIN
N.T.S.

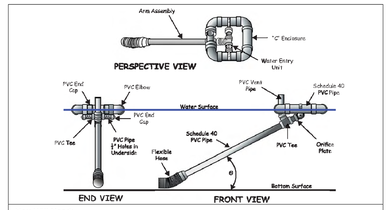

You Will Need:
6 feet or more of 1½" Sch 40 PVC pipe SOLID
Primer and glue for PVC pipe
Phillips screw driver, maybe a knife

Assembly and Installation Directions.

1. Glue on the 2" **inlet extension** to the Tee on the **inlet**. Install the **vent**.

   Details *Prime and glue the 2" inlet extension (with) the coupling, 1½" bushing and screw on one end) into the 2" end of the Tee on the side of the inlet (4" horizontal tube suspended between the sides of the float with the aluminum screen door).*

   Install the vent into the socket in the Tee, back the screw out, insert the short end of the vent, point the long end toward the door on the inlet, and tighten the screw. Use a little grease so it can be removed later.

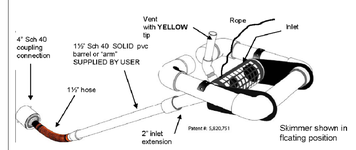

2. Glue the 6' long 1½" sch 40 **barrel** to the 1½" grey coupling on the **hose**.

   Details *You will need 1½" Sch 40 PVC pipe (solid, not foam core) for the barrel (or "arm") between the float assembly and the 1½" hose. The length of the pipe should be about 1.4 times the depth of the basin so the skimmer floats properly when the basin fills with a minimum length of 6' so the skimmer can be pulled to the side of the basin for maintenance.*

   If barrel is longer than 8' weight may have to be added to the inlet so it sits at the right depth.

3. Put the other end of the barrel into the socket on the inlet extension and tighten the screw.

   Details *Make sure the screw point is not protruding into the 1½" bushing on the outlet end of the inlet extension you glued onto the Tee.*

   WITHOUT GLUE OR PRIMER, but with a little grease, insert the other end of the pipe into the bushing all the way in until it hits bottom. It may be easier to do this in the basin after you have connected the hose to the pipe, riser or outlet structure. Tighten the screw so the point enters the pipe to secure it. It does not have to go all the way in. This connection is not glued to allow disassembly and possible reuse of the skimmer later.

4. Cut the **orifice** in the plug (size shown on the erosion control plans), put the plug in the **inlet**, and tighten the screw. Close the door.

   Details *Refer to the erosion control plans for the orifice size. Open the door on the inlet and remove the 2" plug in the inlet. Follow the instructions below for cutting the ORIFICE. Install the orifice in the inlet, secure it with the screw (through the hole in the top of the inlet) and close the door and secure it with the screw eye.*

5. Cut a trench in the bottom of the basin 1' to 2' deep under where the skimmer will be placed. If required, place a support under the skimmer inlet.

   Details *If the skimmer will settle to the bottom when the basin drains it is recommended that a 1' - 2' deep trench a backhoe bucket wide should be excavated under the skimmer to catch sediment that will settle under the skimmer.*

   If a pool of water is to be provided, install the support under the skimmer inlet as shown on the erosion control plans. It is recommended that the hose connection to the pipe through the dam be low enough that the whole pond can be drained using the skimmer even if a pool of water is to be provided. Doing this will avoid using a pump to drain the very bottom of the pond.

   If ice is expected during winter place the skimmer near the dam or side of the basin where the ice will be the thinnest and you can get to the inlet to break the ice and keep water flowing through the skimmer. But do not put it so close to the side that the skimmer cannot settle to the bottom and drain the whole basin.

6. Attach the 4" **coupling** on the **hose** to the pipe through the dam or the outlet structure.

   Details *Make sure the screw points are not protruding into the 4" coupling on the hose and attach it to the pipe through the dam. Tighten the screws just so the points go into the plastic to secure it. Greasing the pipe is recommended so the hose can be removed later.*

   If the connection pipe is larger than 4" you will need a coupling for that pipe, a bushing for that coupling with a 4" socket, and about 10" of 4" pipe to create an attachment.

   If attaching to a metal pipe you will need a rubber coupling (Fernco) and a short piece of 4" pvc pipe to make the connection.

   ***OR** The 4" coupling can be removed and the hose connected using the 2" threaded fitting. If attaching to a concrete structure with a hole or orifice at the bottom, either: 1) grout a 4" PVC pipe into the hole and connect the hose or 2) a more secure way is to use a steel plate with a hole cut in it and 2" coupling welded to it that will fit over the hole in the concrete and bolt the plate to the structure with sealant to make it water tight.*

7. Attach the **rope** to the Tee and the other end to a stake on the side of the basin.

   Details *Tie one end of the rope around the Tee between the vent socket and the 4' tube on the inlet. Secure the other end to a stake or post on the dam or side of the basin where it can be used to pull the skimmer to the side if necessary to remove trash and debris.*

8. Put a fence post, **1** not **2**, on the opposite side of the barrel from where the rope is tied to a stake to keep the skimmer in place.

   Details *Put the skimmer where you want it to settle to the bottom and drive a metal fence post into the ground on the outside of the barrel (away from the side) 2' from the float to hold the skimmer in that place. Make sure it is high enough so the barrel does not float over the top when the basin fills. Posts on both sides of the barrel are not recommended because it will prevent pulling the skimmer to the side for maintenance.*

Maintenance
Trash: If the inlet screen clogs and there is water in the basin, tugging on the rope several times will usually wash the trash off and restore flow. If not, pull the inlet to the side of the basin and use a stick to clean the screen. Open the screen door and remove any trash or sediment inside so grass or trees do not grow in the inlet. (Yes, this can happen)
Sediment Accumulation Around Skimmer: A shallow, long basin, using baffles, and inflow in the basin at the opposite end from the outlet help keep sediment away from the skimmer. If sediment restricts skimmer movement, pull the skimmer to one side and excavate under it.
Ice: Try to keep ice broken up at the inlet and around the barrel to keep water flowing, making it less likely the inlet will freeze. Spray painting the float black to absorb heat is recommended. Use paint that will stick to PVC plastic.
Handling the Skimmer: The skimmer is made of plastic and will withstand heat, cold and sunlight but it needs to be handled by hand, NOT grabbed with a backhoe bucket and yanked around, especially in cold weather. To remove the skimmer, disconnect the hose first, then disconnect the barrel from the inlet extension. DO NOT try to pull the skimmer loose with a backhoe.
Vandalism: Keep unauthorized persons that may do damage off the site. Do not provide rocks close to the skimmer if possible. If possible, taking other considerations into account, position the skimmer out in the basin away from the banks to decrease the potential for a successful hit.

A1 / C5302 TEMPORARY SKIMMER

EROSION CONTROL DETAILS

REVIEW DRAWING
NOT FOR CONSTRUCTION

BALLENTINE ASSOCIATES, P.A.
221 PROVIDENCE ROAD, CHAPEL HILL, N.C. 27514
(919) 923 - 0481 (919) 489 - 4789

COPYRIGHT © 2017
BALLENTINE ASSOCIATES, P.A.
THIS DOCUMENT IS THE PROPERTY OF BALLENTINE ASSOCIATES, P.A. ALL RIGHTS RESERVED. ANY REPRODUCTION OF THIS DOCUMENT OR POSSESSION WITHOUT PRIOR PERMISSION OF BALLENTINE ASSOCIATES, P.A. WILL BE SUBJECT TO LEGAL ACTION.

Ballentine Associates, P.A. CORPORATE SEAL C328 NORTH CAROLINA (Chapel Hill)

NORTH CAROLINA PROFESSIONAL SEAL 042542 ENGINEER DAVID W. SMITH 28 JUN 17

NUM	REVISIONS	DATE
A	PER E-F FDP REVIEW COMMENTS	28 JUN 17

ISSUED	DATE
E-F FDP SUBMITTAL #1	21 APR 17
E-F FDP SUBMITTAL #2	28 JUN 17

OWNER INFORMATION
RAM REALTY ADVISORS
1930 CAMDEN RD.
CHARLOTTE, NC 28203

OWNERS REPRESENTATIVE:
DAVID KLEPSER
PH. (704) 377-8773
FAX (704) 377-6920
EMAIL dklepser@ramrealestate.com

FORDHAM BLVD. APARTMENTS
CHAPEL HILL, NORTH CAROLINA

E-F FORM DISTRICT PERMIT DRAWINGS

JOB #: 116026.00
DATE: 21 APR 17
SCALE: AS NOTED
DRAWN BY: D.W.S.
REVIEWED BY: G.J.R.

SHEET
C5302

N:\Projects\116026.00 Fordham Blvd Apartments\1_Dwg\BA-Model Files\C5301-EC Details-Fordham.dwg, 6/27/2017 9:32:26 PM, frankie

OUTDOOR AMENITY SPACE
10,660 SF.

CONCRETE COURTYARD

LANDSCAPED COURTYARD

CONCRETE STAIRS

SHED

RECREATION SPACE
16,950 SF.

FITNESS CENTER
& CLUBHOUSE
SEE ARCH. PLANS

POOL

TREE PLANTER OPENINGS (TYP)
5' X 8' MIN.

6' CONCRETE WALK

6'

PERMEABLE CONCRETE
PAVERS - SEE CIVIL PLANS

SOUTH ELLIOTT ROAD

N 84°26'31" W 1,16.50'

S 84°44'44" E 411.52'

10'

STOOPS AND PATIOS
SEE ARCH. PLANS

STOOPS AND PATIOS
SEE ARCH. PLANS

12'

8' PLANTING STRIP

CONCRETE WALKS TO STOOPS (TYP.)

12' CONCRETE MULTI-USE PATH

12' HEAVY DUTY CONCRETE
AT CROSSING

SERVICE ROAD

EXISTING POWER POLE
PROPOSED COBRA HEAD
STREET FIXTURE
TO BE ADDED (TYP)

8' PLANTING STRIP

FORDHAM BLVD.

LIGHT FIXTURE:
LED LIFESTYLE
14' MOUNTING HEIGHT

DISPATCH TRASH CAN
43" X 25.5" X 21.8"

LOOP BIKE RACK (TYP)
14" X 36" X 31"

NEOLIVIANO BENCH (TYP)
69" X 26.5" X 31"

GOOSENECK WALL MOUNT LIGHT

20' 10' 0 20' 40'

Pedestrian Area Plan / Site Furniture

Scale: 1" = 20'

01

CLINE DESIGN

125 N. Harrington St.
Raleigh, NC 27603
919/833-6413
919/836-1280 FAX
ClineDesignAssoc.com

Pin: 9799245697, 9799242361

RAM REALTY SERVICES

Fordham Blvd. Apartments

1300 FORDHAM BOULEVARD
CHAPEL HILL, NORTH CAROLINA

EFD
APPLICATION

CLINE DESIGN ASSOCIATES, PA
REGISTERED ARCHITECTURAL COMPANY
CERT.NO. 494
NORTH CAROLINA
RALEIGH, N.C.

NORTH CAROLINA
REGISTERED LANDSCAPE ARCHITECT
761
JOHN C. WOOD

PROJECT: 016133

DATE: 04.21.2017	
REVISIONS:	DATE
CMNTS. ROUND 1 REVISION A	6.28.17

DRAWN BY:	SP / CT
CHECKED BY:	JCW

Pedestrian Area Plan /
Site Furniture

SD1.00

© 2017 CLINE DESIGN ASSOCIATES, PA EXPRESSLY RESERVES ITS COMMON LAW COPYRIGHT AND OTHER PROPERTY RIGHTS IN THESE PLANS. THESE PLANS ARE NOT TO BE REPRODUCED, CHANGED OR COPIED IN ANY FORM OR MANNER WHATSOEVER, NOR ARE THEY TO BE ASSIGNED TO ANY THIRD PARTY WITHOUT FIRST OBTAINING THE EXPRESSED WRITTEN PERMISSION AND CONSENT OF CLINE DESIGN ASSOCIATES, PA.

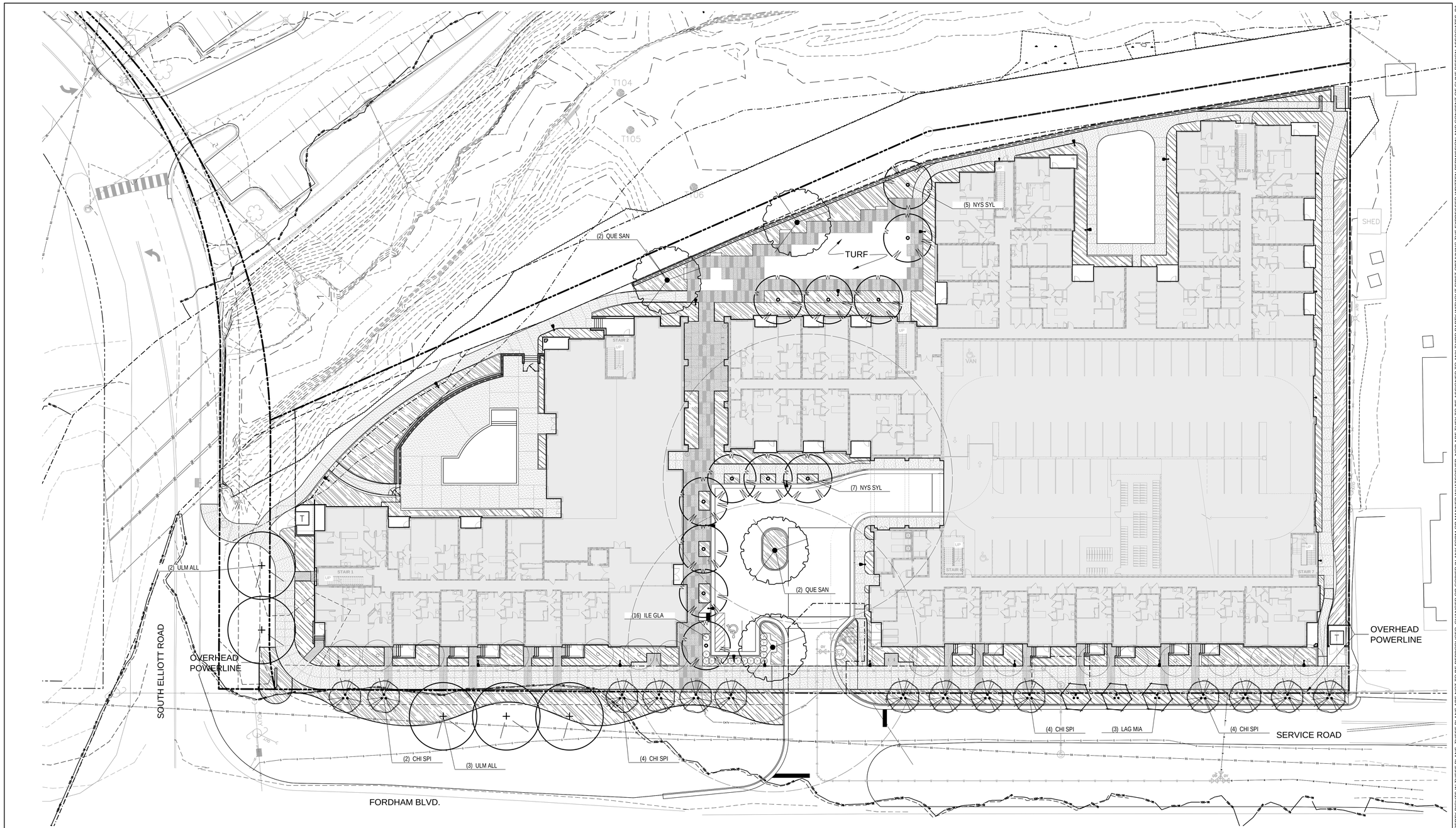

Landscape Plan 02

Scale: 1" = 20'

PLANT SCHEDULE

TREES	QTY	BOTANICAL NAME	CAL.	HT.	SPR.
NYS SYL	12	Nyssa sylvatica Tupelo FULL	2.5"	12'–14'	5–6'
QUE SAN	4	Quercus nuttallii 'QNSTD' Sangria Nuttall Oak Full Head, Matching	2,5"	12–14'	6–7'
ULM ALL	5	Ulmus parvifolia 'UPMTF' Bosque® Lacebark Elm Full Head. Matched	3"	14–16'	7–8'

UNDERSTORY TREES	QTY	BOTANICAL NAME	CAL.	HT.	SPR.
CHI SPI	14	Chionanthus retusus 'Spirit' White Fringetree ** Full, Matched	2"	10'	5'
LAG MIA	3	Lagerstroemia fauriei 'Miami' Miami Crape Myrtle Full Head. Matched, Single Trunk	2"	10–12'	5–6'

SHRUBS	QTY	BOTANICAL NAME	HT.	SPR.
ILE GLA	16	Ilex glabra Inkberry Holly Full to Ground, Matched	18"	15"

**Alternative Tree Species

Amelanchier x grandiflora 'Autumn Brilliance'	Autumn Brilliance Serviceberry
Cercis canadensis 'Forest Pansy'	Forest Pansy Redbud
Lagerstroemia fauriei 'Miami'	Miami Crape Myrtle

SHRUB AREAS	CODE	QTY	BOTANICAL NAME	CONT	HT.	SPR.
	SHRUBS	17,295 sf	Typical Plant Beds Mixed Shrubs/Groundcovers	Cont	8–36"	6–24"

Representative Landscape Schedule 03

TYPE 'B' FRONTAGE 545 LF
STREETSCAPE TREE SPACING

REQUIRED
545 LF X [1 TREE / 40LF] = 14 CANOPY TREES
PROPOSED
PER DES. ALT #2 3 CANOPY TREES
& 16 ORNAMENTAL TREES

Landscape Calculations 01

CLINE DESIGN
125 N. Harrington St.
Raleigh, NC 27603
919/833-6413
919/836-1280 FAX
ClineDesignAssoc.com

Pin: 9799245697, 9799242361

RAM REALTY SERVICES
Fordham Blvd. Apartments
1300 FORDHAM BOULEVARD
CHAPEL HILL, NORTH CAROLINA

EFD APPLICATION

CLINE DESIGN ASSOCIATES, PA
LICENSED LANDSCAPE ARCHITECTURE FIRM
CERT.NO. 494
NORTH CAROLINA
RALEIGH, N.C.

NORTH CAROLINA
REGISTERED LANDSCAPE ARCHITECT
761
JOHN C. WOOD

PROJECT: 016133
DATE: 04.21.2017

REVISIONS:	DATE
CMNTS. ROUND 1 REVISION A	6.28.17

DRAWN BY: SP / CT
CHECKED BY: JCW

Landscape Plan
& Representative
Landscape Schedule

LP1.00

© 2017 CLINE DESIGN ASSOCIATES, PA EXPRESSLY RESERVES ITS COMMON LAW COPYRIGHT AND OTHER PROPERTY RIGHTS IN THESE PLANS. THESE PLANS ARE NOT TO BE REPRODUCED, CHANGED OR COPIED IN ANY FORM OR MANNER WHATSOEVER, NOR ARE THEY TO BE ASSIGNED TO ANY THIRD PARTY WITHOUT FIRST OBTAINING THE EXPRESSED WRITTEN PERMISSION AND CONSENT OF CLINE DESIGN ASSOCIATES, PA.