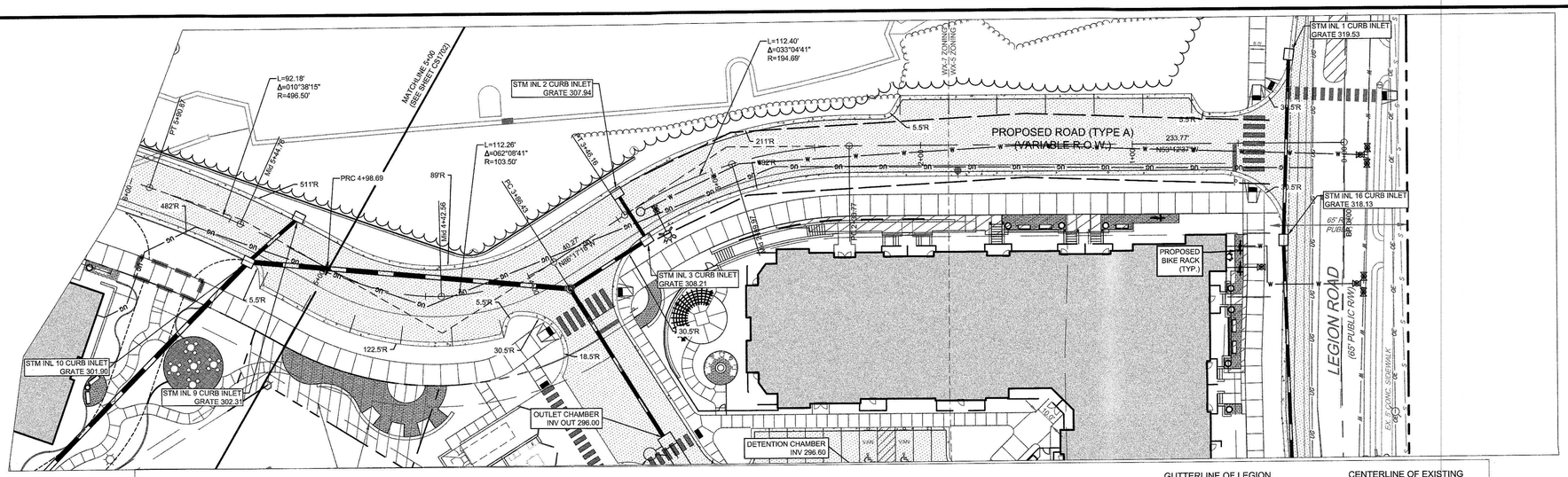

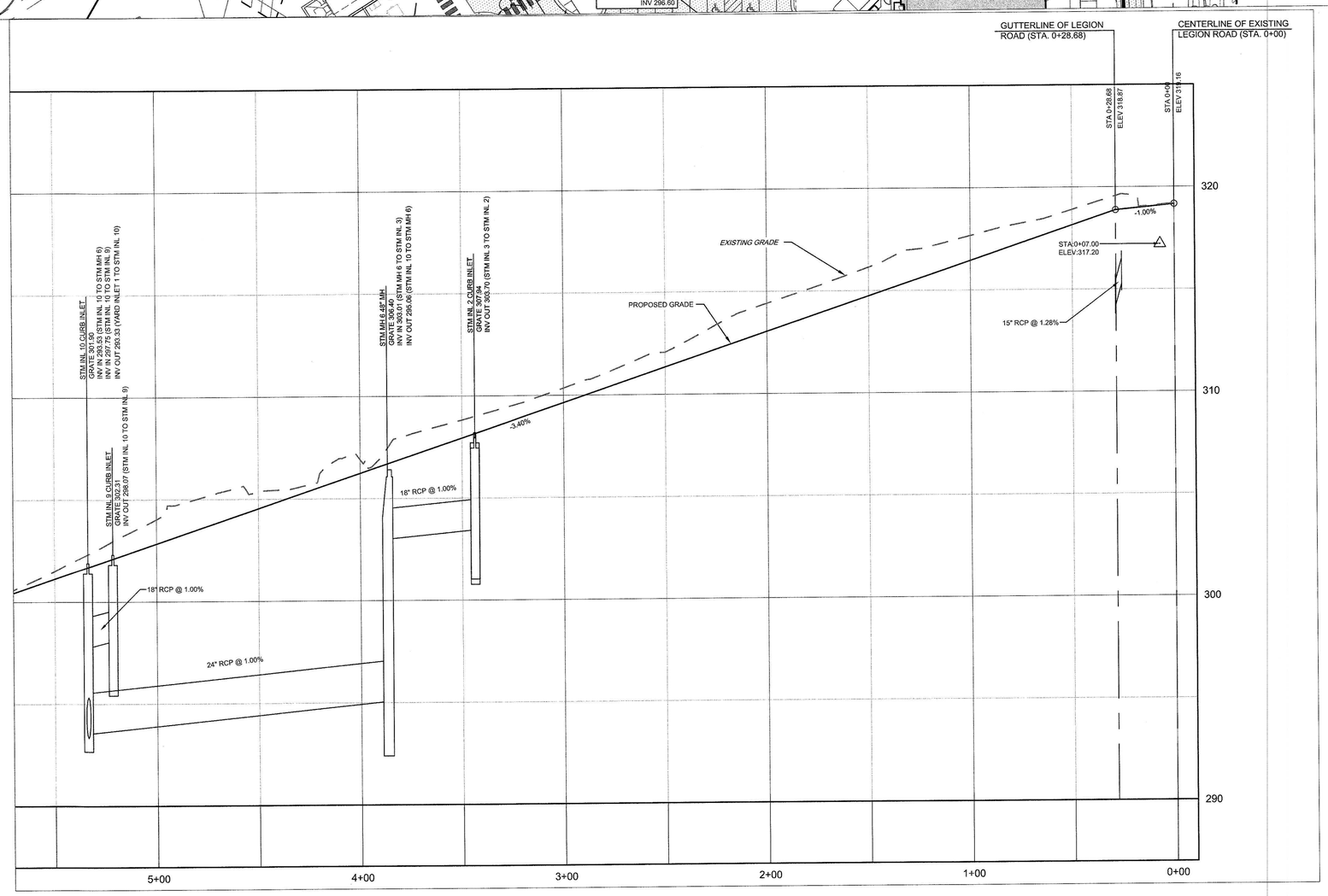

0 30' 60'

PHILIP POST & ASSOCIATES
A Division of Pennoni Firm License F-1267
PENNONI ASSOCIATES INC.
401 Providence Road #200
Chapel Hill, NC 27514
T 919.929.1173 F 919.493.6548

ALL DIMENSIONS MUST BE VERIFIED BY CONTRACTOR AND OWNER MUST BE NOTIFIED OF ANY DISCREPANCIES BEFORE PROCEEDING WITH WORK

NORTH CAROLINA PROFESSIONAL SEAL 030517 ENGINEER TIMOTHY A. SMITH
2-20-17

HILLSTONE CHAPEL HILL
1730 FORDHAM BLVD.
CHAPEL HILL, NORTH CAROLINA 27514

PROPOSED ROAD PLAN AND PROFILE - 2

LEON CAPITAL GROUP
5970 FAIRVIEW ROAD, SUITE 450
CHARLOTTE, NORTH CAROLINA 28210

NO.	DATE	BY
1	2/8/2017	WRA

REVISIONS PER TOWN'S REVIEW COMMENTS

REVISIONS

ALL DOCUMENTS PREPARED BY PENNONI ASSOCIATES ARE INSTRUMENTS OF SERVICE IN RESPECT OF THE PROJECT. THEY ARE NOT INTENDED OR REPRESENTED TO BE SUITABLE FOR REUSE BY OWNER OR OTHERS ON THE EXTENSIONS OF THE PROJECT OR ON ANY OTHER PROJECT. ANY REUSE WITHOUT WRITTEN VERIFICATION OR ADAPTATION BY PENNONI ASSOCIATES FOR THE SPECIFIC PURPOSE INTENDED WILL BE AT OWNERS SOLE RISK AND WITHOUT LIABILITY OR LEGAL EXPOSURE TO PENNONI ASSOCIATE; AND OWNER SHALL INDEMNIFY AND HOLD HARMLESS PENNONI ASSOCIATES FROM ALL CLAIMS, DAMAGES, LOSSES AND EXPENSES ARISING OUT OF OR RESULTING THEREFROM.

PROJECT	LCGR1602
DATE	DECEMBER 7, 2016
DRAWING SCALE	1" = 30'
DRAWN BY	WRA
APPROVED BY	TAS

CS3502

SHEET 16 OF 25

P:\Projects\LCGRCOM\LCGR1602-Apartment Site\DESIGN_PUBLISH\CS3502.dwg PLOTTED: 2/15/2017 8:34 PM, BY: William Akin PLOTSTYLE: Pennoni NCS.ctb PROJECT STATUS: DESIGN/DEVELOPMENT

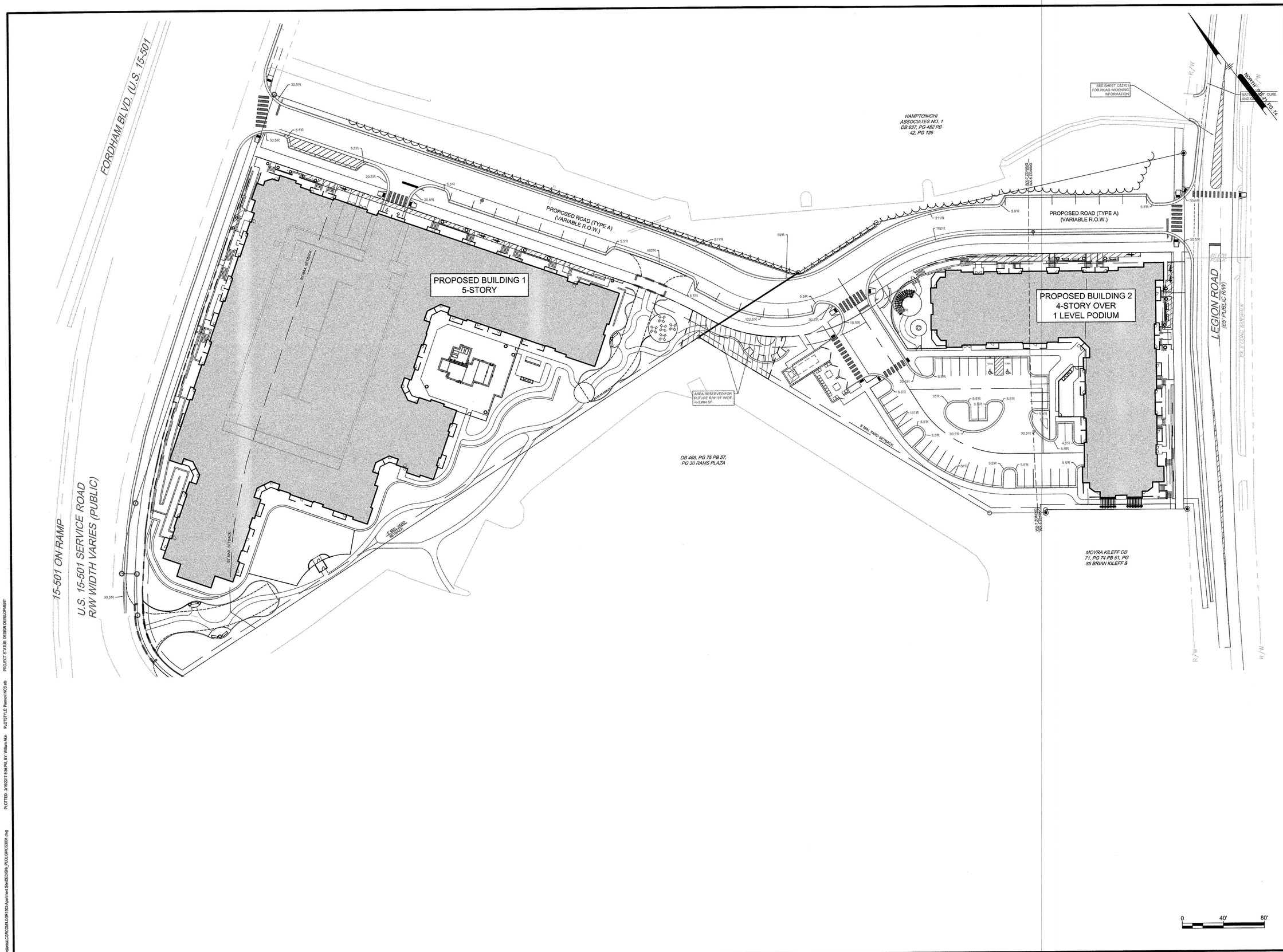

PHILIP POST & ASSOCIATES

A Division of Pennoni Firm License F-1267

PENNONI ASSOCIATES INC.
401 Providence Road #200
Chapel Hill, NC 27514
T 919.929.1173 F 919.493.6548

ALL DIMENSIONS MUST BE VERIFIED BY CONTRACTOR AND OWNER MUST BE NOTIFIED OF ANY DISCREPANCIES BEFORE PROCEEDING WITH WORK

NORTH CAROLINA PROFESSIONAL SEAL 030517 ENGINEER TIMOTHY A. SMITH

HILLSTONE CHAPEL HILL

1730 FORDHAM BLVD.
CHAPEL HILL, NORTH CAROLINA 27514

ZONING PLAN

LEON CAPITAL GROUP
5970 FAIRVIEW ROAD, SUITE 450
CHARLOTTE, NORTH CAROLINA 28210

DATE	NO.	REVISIONS	BY

ALL DOCUMENTS PREPARED BY PENNONI ASSOCIATES ARE INSTRUMENTS OF SERVICE IN RESPECT OF THE PROJECT. THEY ARE NOT INTENDED OR REPRESENTED TO BE SUITABLE FOR REUSE BY OWNER OR OTHERS ON THE EXTENSIONS OF THE PROJECT OR ON ANY OTHER PROJECT. ANY REUSE WITHOUT WRITTEN VERIFICATION OR ADAPTATION BY PENNONI ASSOCIATES FOR THE SPECIFIC PURPOSE INTENDED WILL BE AT OWNERS SOLE RISK AND WITHOUT LIABILITY OR LEGAL EXPOSURE TO PENNONI ASSOCIATE: AND OWNER SHALL INDEMNIFY AND HOLD HARMLESS PENNONI ASSOCIATES FROM ALL CLAIMS, DAMAGES, LOSSES AND EXPENSES ARISING OUT OF OR RESULTING THEREFROM.

PROJECT	LCGR1602
DATE	DECEMBER 7, 2016
DRAWING SCALE	1" = 30'
DRAWN BY	WRA
APPROVED BY	TAS

CS3601

SHEET 17 OF 25

P:\Projects\LCGRCOM\LCGR1602-Apartment Site\DESIGN_PUBLISH\CS3601.dwg PLOTTED: 2/15/2017 8:35 PM, BY: William Akin PLOTSTYLE: Pennoni NCS.ctb PROJECT STATUS: DESIGN DEVELOPMENT

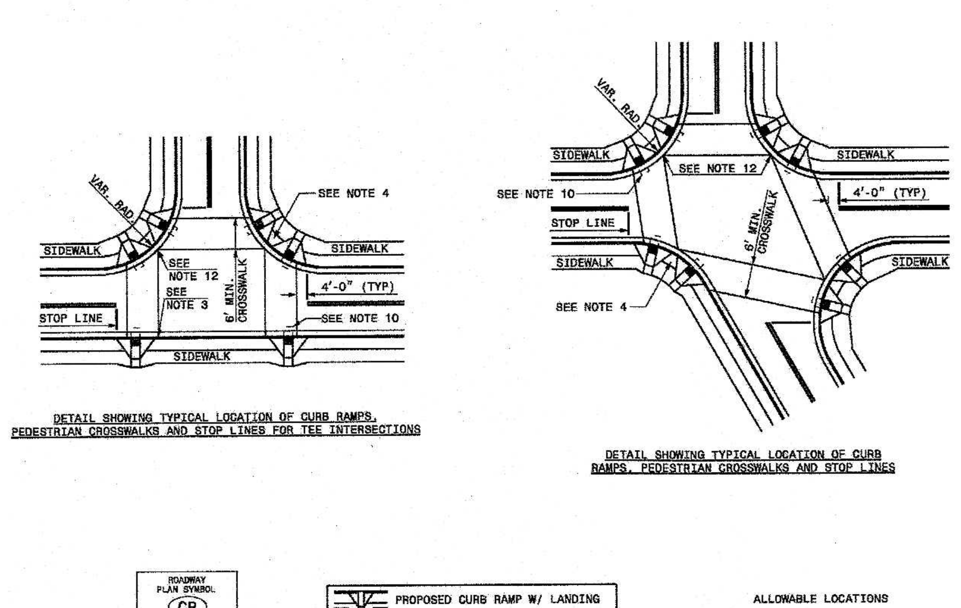

STATE OF NORTH CAROLINA DEPT. OF TRANSPORTATION DIVISION OF HIGHWAYS RALEIGH, N.C. | 1-12

ENGLISH STANDARD DRAWING FOR **CURB RAMP** PROPOSED CURB AND GUTTER

SHEET 2 OF 3 — 848.05

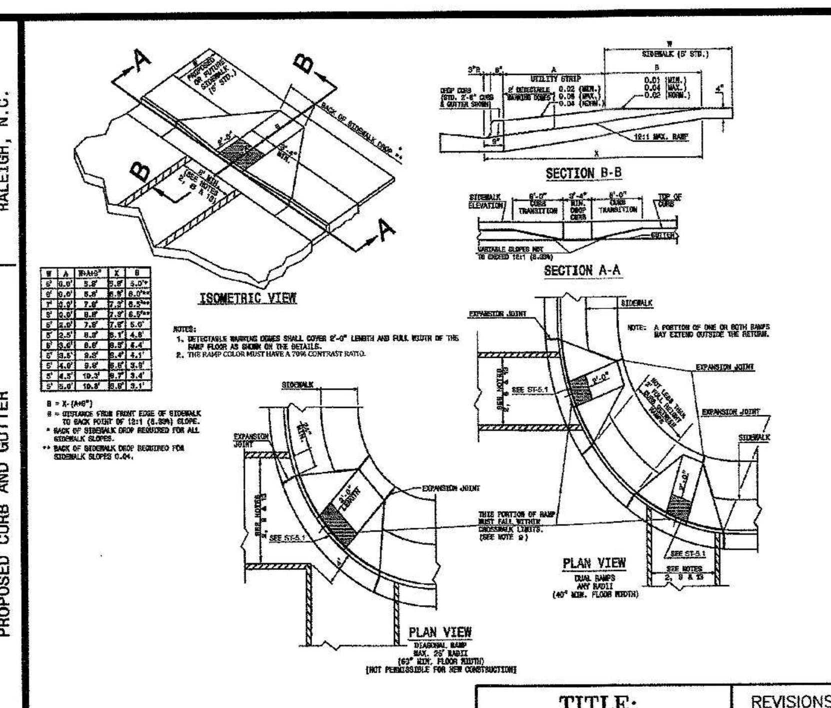

ENGINEERING DEPARTMENT STANDARD DETAILS

NOTE: DRAWING NOT TO SCALE
SOURCE: NCDOT STANDARD DRAWINGS

TITLE:	REVISIONS		DET.NO.
ACCESSIBLE RAMP	09/03 02/08	JH ER	ST - 5.3

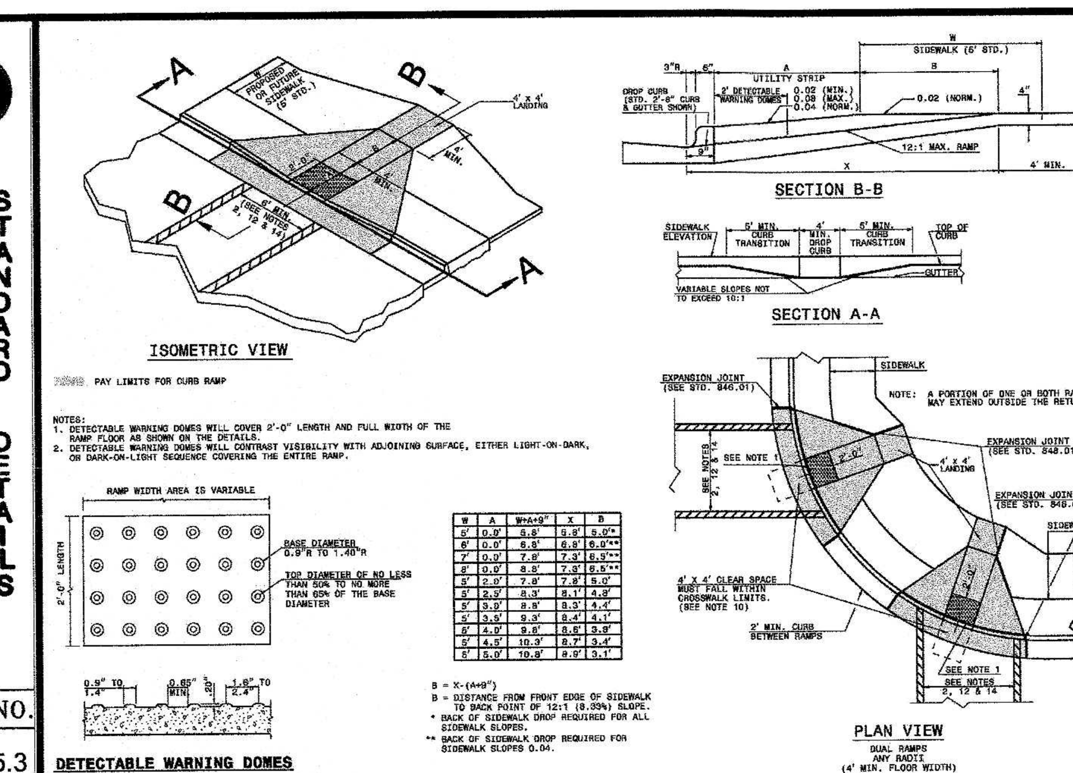

NOTES:
1. DETECTABLE WARNING DOMES WILL COVER 2'-0" LENGTH AND FULL WIDTH OF THE RAMP FLOOR AS SHOWN ON THE DETAILS.
2. DETECTABLE WARNING DOMES WILL CONTRAST VISIBILITY WITH ADJOINING SURFACE, EITHER LIGHT-ON-DARK, OR DARK-ON-LIGHT SEQUENCE COVERING THE ENTIRE RAMP.

STATE OF NORTH CAROLINA DEPT. OF TRANSPORTATION DIVISION OF HIGHWAYS RALEIGH, N.C. | 1-12

ENGLISH STANDARD DRAWING FOR **CURB RAMP** PROPOSED CURB AND GUTTER

SHEET 1 OF 3 — 848.05

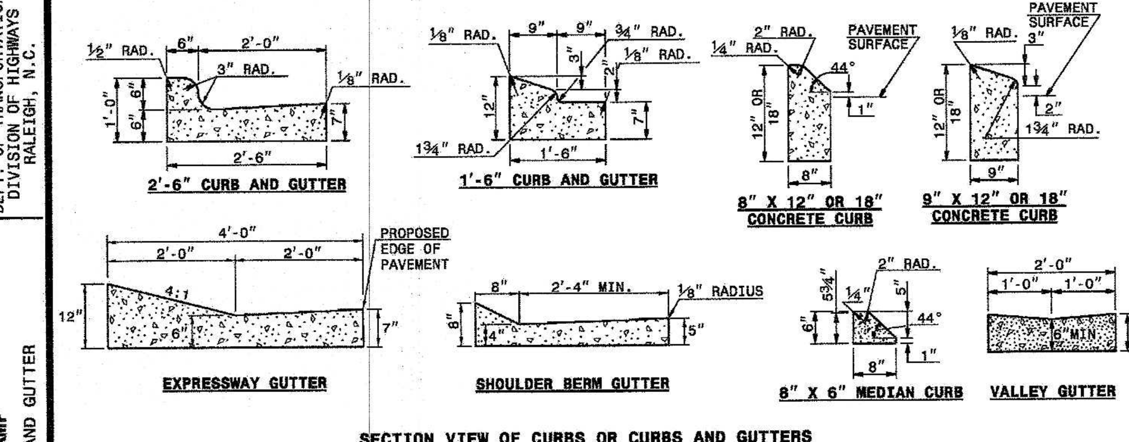

GENERAL NOTES:
- PLACE CONTRACTION JOINTS AT 10' INTERVALS, EXCEPT THAT A 15' SPACING MAY BE USED WHEN A MACHINE IS USED OR WHEN SATISFACTORY SUPPORT FOR THE FACE FORM CAN BE OBTAINED WITHOUT THE USE OF TEMPLATES AT 10' INTERVALS.
- JOINT SPACING MAY BE ALTERED IF REQUIRED BY THE ENGINEER.
- CONTRACTION JOINTS MAY BE INSTALLED WITH THE USE OF TEMPLATES OR FORMED BY OTHER APPROVED METHODS. CONSTRUCT NON-TEMPLATE FORMED JOINTS A MIN. OF 1½" DEEP.
- FILL ALL CONSTRUCTION JOINTS, EXCEPT IN 8"x6" MEDIAN CURB, WITH JOINT FILLER AND SEALER.
- SPACE EXPANSION JOINTS AT 90' INTERVALS AND ADJACENT TO ALL RIGID OBJECTS.

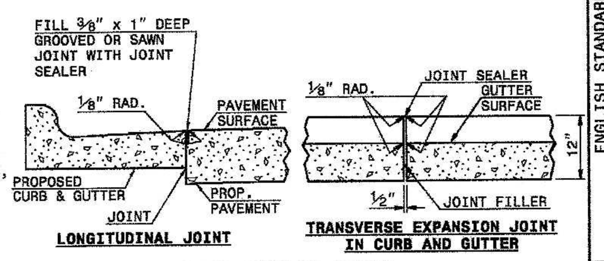

STATE OF NORTH CAROLINA DEPT. OF TRANSPORTATION DIVISION OF HIGHWAYS RALEIGH, N.C. | 1-12

ENGLISH STANDARD DRAWING FOR CONCRETE CURB, GUTTER AND CURB & GUTTER

SHEET 1 OF 3 — 846.01

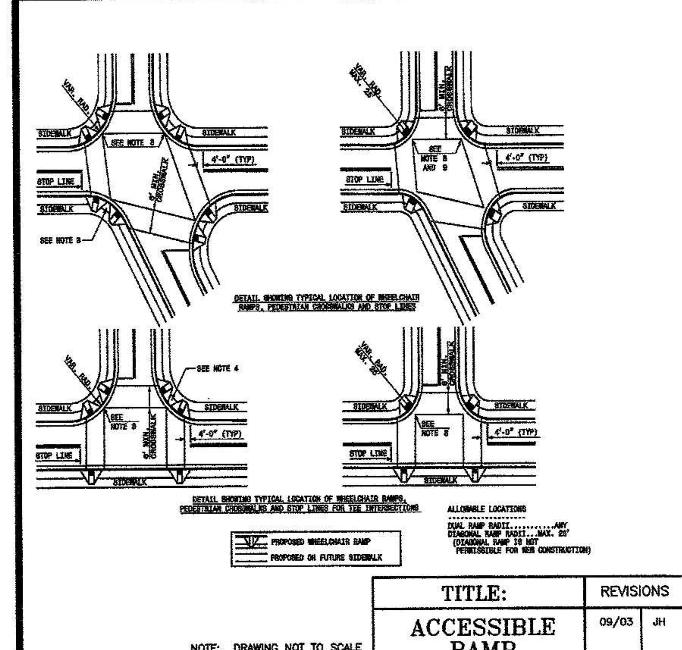

ENGINEERING DEPARTMENT STANDARD DETAILS

NOTE: DRAWING NOT TO SCALE
SOURCE: NCDOT STANDARD DRAWINGS

TITLE:	REVISIONS		DET.NO.
ACCESSIBLE RAMP	09/03	JH	ST - 5.2

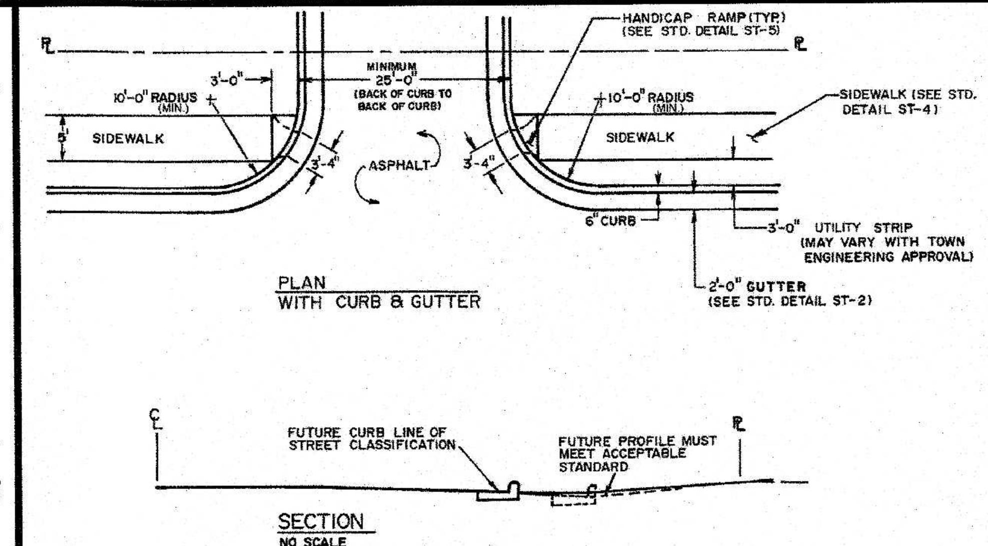

NOTES:
1. FOR COMMERCIAL & MULTI-FAMILY USES ONLY.
2. DRIVES TO BE GRADED TO DRAIN TOWARD STREET FROM PROPERTY LINE & AWAY FROM STREET FROM PROPERTY LINE UNLESS STORM DRAINAGE STRUCTURES ARE PROVIDED TO INTERCEPT STORM FLOWS.
3. DRIVE GRADE PROFILE SHALL BE DESIGNED TO TIE IN WITH ULTIMATE WIDENING OF STREET.

NO SCALE

TITLE	REVISIONS			DET.NO.
DRIVEWAY-STREET TYPE, CURB & GUTTER SECTION	NO	DATE	BY	D-3

ENGINEERING DEPARTMENT STANDARD DETAILS

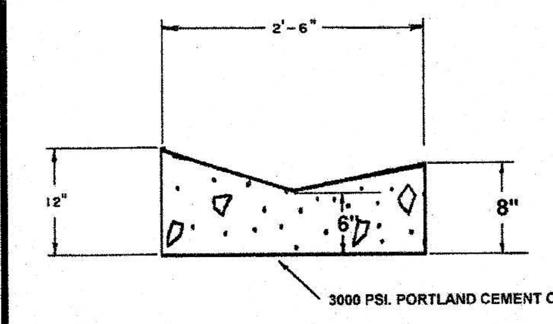

MANAGER'S PRIOR APPROVAL REQUIRED
FIRE LANE ENTRANCE

TITLE	REVISIONS			DET.NO.
VALLEY CURB AND GUTTER SECTION	NO	DATE	BY	ST-2C

ENGINEERING DEPARTMENT STANDARD DETAILS

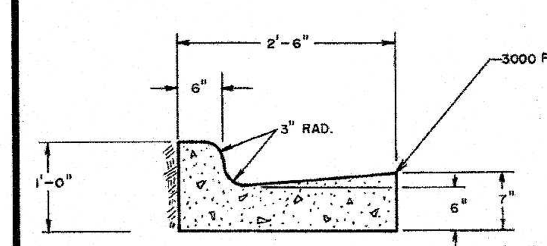

SCALE: 1"=1'-0"

TITLE	REVISIONS			DET.NO.
CURB & GUTTER SECTION	NO	DATE	BY	ST-2

ENGINEERING DEPARTMENT STANDARD DETAILS

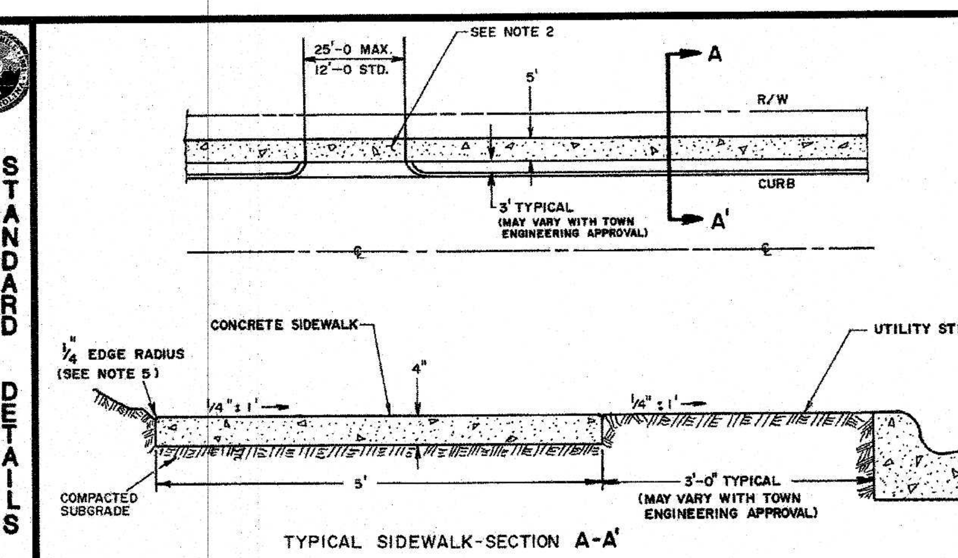

NOTES:
1. ALL CONCRETE 3000 PSI.
2. SEE STANDARD DETAIL "D-1" FOR THROUGH DRIVEWAY SPECIFICATIONS.
3. EXPANSION JOINTS 50' APART MAXIMUM.
4. CONTROL JOINT EVERY 5 FEET.
5. ALL SIDEWALKS SHALL BE CONSTRUCTED WITH TOOLED ¼" EDGE RADIUS.
6. IF UTILITY STRIP IS COMPLETELY ELIMINATED, SIDEWALK SHALL BE PLACED DIRECTLY AT BACK-OF-CURB, WITH ¼" EDGE RADIUS.

NO SCALE

TITLE	REVISIONS			DET.NO.
TYPICAL SIDEWALK	NO	DATE	BY	ST-4

ENGINEERING DEPARTMENT STANDARD DETAILS

NOTES:

1. CONSTRUCT THE WALKING SURFACE WITH SLIP RESISTANCE AND A 70% CONTRASTING COLOR TO THE SIDEWALK.
2. CROSSWALK WIDTHS AND CONFIGURATION MAY VARY BUT MUST CONFORM TO TRAFFIC DESIGN STANDARDS.
3. PROVIDE WHEELCHAIR RAMPS AT LOCATIONS AS SHOWN ON THE PLANS OR AS DIRECTED BY THE ENGINEER. LOCATE WHEELCHAIR RAMPS AS DIRECTED BY THE ENGINEER WHERE EXISTING LIGHT POLES, FIRE HYDRANTS, DROP INLETS, ETC. AFFECT PLACEMENT. WHERE TWO RAMPS ARE INSTALLED, PLACE NOT LESS THAN TWO FEET OF FULL HEIGHT CURB BETWEEN THE RAMPS. PLACE DUAL RAMPS AS PERPENDICULAR TO THE TRAVEL LANE BEING CROSSED AS POSSIBLE.
4. DO NOT EXCEED 0.08 (12:1) SLOPE ON THE WHEELCHAIR RAMP IN RELATIONSHIP TO THE GRADE OF THE STREET.
5. CONSTRUCT WHEELCHAIR RAMPS 40" (3'-4") OR GREATER FOR DUAL RAMPS AND 60" (5'-0") OR GREATER FOR DIAGONAL RAMPS.
6. USE CONCRETE WITH A SIDEWALK FINISH IN ORDER TO OBTAIN A ROUGH NON-SKID TYPE SURFACE.
7. PLACE A 1/2" EXPANSION JOINT WHERE THE CONCRETE WHEELCHAIR RAMP JOINS THE CURB AS SHOWN ON DETAIL ST-5A.
8. PLACE THE INSIDE PEDESTRIAN CROSSWALK LINES NO CLOSER IN THE INTERSECTION BY BISECTING THE INTERSECTION RADII, WITH ALLOWANCE OF A 4' CLEAR ZONE IN THE VEHICULAR TRAVELWAY WHEN ONE RAMP IS INSTALLED. (SEE NOTE 13)
9. COORDINATE THE CURB CUT AND THE PEDESTRIAN CROSSWALK LINES SO THE FLOOR OF THE WHEELCHAIR RAMP WILL FALL WITHIN THE PEDESTRIAN CROSSWALK LINES. PLACE DIAGONAL RAMPS WITH FLARED SIDES SO 24" OF FULL HEIGHT CURB FALLS WITHIN THE CROSSWALK MARKINGS ON EACH SIDE OF THE FLARES.
10. CONSTRUCT THE PEDESTRIAN CROSSWALK A MINIMUM OF 6 FEET. A CROSSWALK WIDTH OF 8 FEET OR GREATER IS DESIRABLE.
11. USE STOP LINES, NORMALLY PERPENDICULAR TO THE LANE LINES, WHERE IT IS IMPORTANT TO INDICATE THE POINT BEHIND WHICH VEHICLES ARE REQUIRED TO STOP IN COMPLIANCE WITH A TRAFFIC SIGNAL, STOP SIGN OR OTHER LEGAL REQUIREMENT. AN UNUSUAL APPROACH SKEW MAY REQUIRE THE PLACEMENT OF THE STOP LINE TO BE PARALLEL TO THE INTERSECTION ROADWAY.
12. TERMINATE PARKING A MINIMUM OF 20 FEET BACK OF PEDESTRIAN CROSSWALK.
13. PLACE ALL PAVEMENT MARKINGS IN ACCORDANCE WITH THE LATEST EDITION OF THE MANUAL OF UNIFORM TRAFFIC CONTROL DEVICES (MUTCD) PUBLISHED BY THE FEDERAL HIGHWAY ADMINISTRATION AND THE NORTH CAROLINA SUPPLEMENT TO THE MUTCD.

SOURCE: NCDOT STANDARD DRAWINGS

TITLE:	REVISIONS		DET.NO.
ACCESSIBLE RAMP	09/03	JH	ST - 5.4

ENGINEERING DEPARTMENT STANDARD DETAILS

NOTES:
1. CONSTRUCT THE RAMP SURFACE TO BE STABLE, FIRM, AND SLIP RESISTANT. CONSTRUCT THE CURB RAMP TYPE AS SHOWN IN THE PAVEMENT MARKING PLANS OR AS DIRECTED BY THE ENGINEER.
2. LOCATE CURB RAMPS AND PLACE PEDESTRIAN CROSSWALK MARKINGS AS SHOWN IN THE PAVEMENT MARKING PLANS. WHEN FIELD ADJUSTMENTS REQUIRE MOVING CURB RAMPS OR MARKINGS AS SHOWN, CONTACT THE SIGNING AND DELINEATION UNIT OR LOCATE AS DIRECTED BY THE ENGINEER.
3. COORDINATE THE CURB RAMP AND THE PEDESTRIAN CROSSWALK MARKINGS SO A 4'x4' CLEAR SPACE AT THE BASE OF THE CURB RAMP WILL FALL WITHIN THE PEDESTRIAN CROSSWALK LINES.
4. SET BACK DISTANCE FROM INSIDE CROSSWALK MARKING TO NEAREST EDGE OF TRAVEL LANE IS 4' MINIMUM.
5. REFER TO THE PAVEMENT MARKING PLANS FOR STOP BAR LOCATIONS AT SIGNALIZED INTERSECTIONS. IF A PAVEMENT MARKING PLAN IS NOT PROVIDED, CONTACT THE SIGNAL DESIGN SECTION FOR THE STOP BAR LOCATIONS OR LOCATE AS DIRECTED BY THE ENGINEER.
6. TERMINATE PARKING A MINIMUM OF 20' BACK OF A PEDESTRIAN CROSSWALK.
7. CONSTRUCT CURB RAMPS A MINIMUM OF 4' WIDE.
8. CONSTRUCT THE RUNNING SLOPE OF THE RAMP 8.33% MAXIMUM.
9. ALLOWABLE CROSS SLOPE ON SIDEWALKS AND CURB RAMPS WILL BE 2% MAXIMUM.
10. CONSTRUCT THE SIDE FLARE SLOPE A MAXIMUM OF 10% MEASURED ALONG THE CURB LINE.
11. CONSTRUCT THE COUNTER SLOPE OF THE GUTTER OR STREET AT THE BASE OF THE CURB RAMP A MAXIMUM OF 5% AND MAINTAIN A SMOOTH TRANSITION.
12. CONSTRUCT LANDINGS FOR SIDEWALK A MINIMUM OF 4'x4' WITH A MAXIMUM SLOPE OF 2% IN ANY DIRECTION. CONSTRUCT LANDINGS FOR MEDIAN ISLANDS A MINIMUM OF 5'x5' WITH A MAXIMUM SLOPE OF 2% IN ANY DIRECTION.
13. TO USE A MEDIAN ISLAND AS A PEDESTRIAN REFUGE AREA, MEDIAN ISLANDS WILL BE A MINIMUM OF 6' WIDE. CONSTRUCT MEDIAN ISLANDS TO PROVIDE PASSAGE OVER OR THROUGHT THE ISLAND.
14. SMALL CHANNELIZATION ISLANDS THAT CAN NOT PROVIDE A 5'X5' LANDING AT THE TOP OF A RAMPS, WILL BE CUT THROUGH LEVEL WITH THE SURFACE STREET.
15. CURB RAMPS WITH RETURNED CURBS MAY BE USED ONLY WHERE PEDESTRIANS WOULD NOT NORMALLY WALK ACROSS THE RAMP. THE ADJACENT SURFACE IS PLANTING OR OTHER NON-WALKING SURFACE OR THE SIDE APPROACH IS SUBSTANTIALLY OBSTRUCTED.
16. PLACE A ½" EXPANSION JOINT WHERE THE CONCRETE CURB RAMP JOINS THE CURB AS SHOWN IN ROADWAY STANDARD DRAWING 848.01
17. PLACE ALL PEDESTRIAN PUSH BUTTON ACTUATORS AND CROSSING SIGNALS AS SHOWN IN THE PLANS OR AS SHOWN IN THE MUTCD.
18. CURB RAMPS THROUGH MEDIAN ISLANDS, SINGLE RAMPS AT DUAL CROSSWALKS OR LIMITED R/W SITUATIONS, WILL BE HANDLED BY SPECIAL DETAILS. CONTACT THE CONTRACT STANDARDS AND DEVELOPMENT UNIT FOR THE DETAILS OR FOR A SPECIAL DESIGN.

STATE OF NORTH CAROLINA DEPT. OF TRANSPORTATION DIVISION OF HIGHWAYS RALEIGH, N.C. | 1-12

ENGLISH STANDARD DRAWING FOR **CURB RAMPS** NOTES

SHEET 3 OF 3 — 848.05

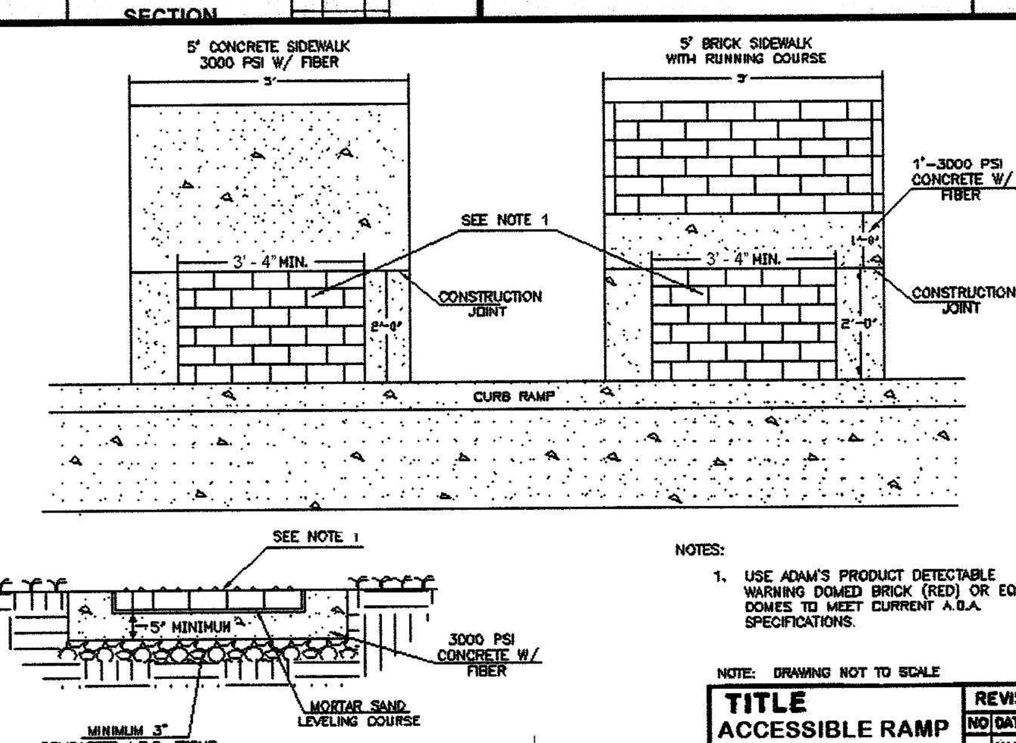

NOTES:
1. USE ADAM'S PRODUCT DETECTABLE WARNING DOMED BRICK (RED) OR EQUAL. DOMES TO MEET CURRENT A.D.A. SPECIFICATIONS.

NOTE: DRAWING NOT TO SCALE

TITLE	REVISIONS			DET.NO
ACCESSIBLE RAMP WITH DETECTABLE WARNING DOMES	NO	DATE	BY	ST-5.1
		4/11/06	MCR	
		5/8/07	LRT	

ENGINEERING DEPARTMENT STANDARD DETAILS

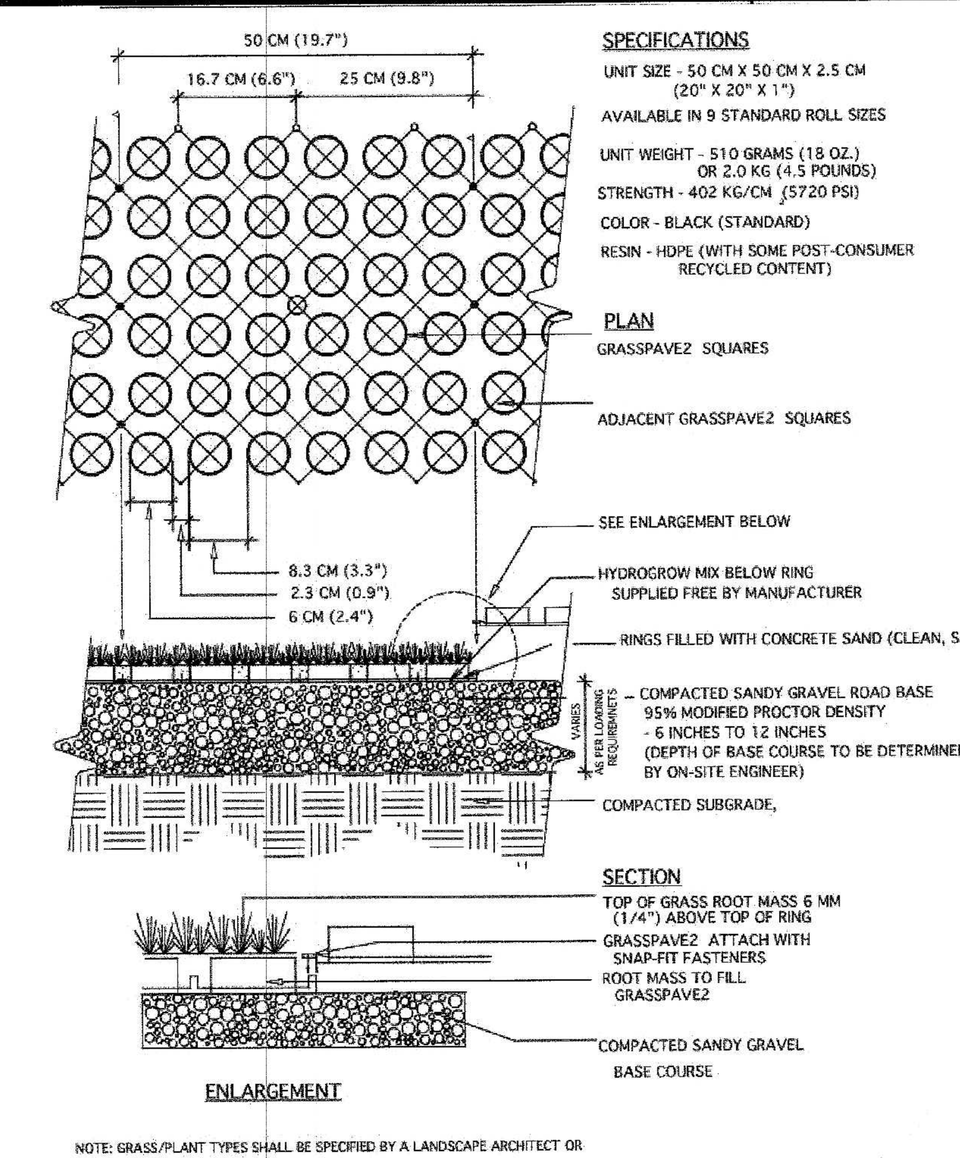

SPECIFICATIONS
UNIT SIZE - 50 CM X 50 CM X 2.5 CM (20" X 20" X 1")
AVAILABLE IN 9 STANDARD ROLL SIZES
UNIT WEIGHT - 510 GRAMS (18 OZ.) OR 2.0 KG (4.5 POUNDS)
STRENGTH - 402 KG/CM (5720 PSI)
COLOR - BLACK (STANDARD)
RESIN - HDPE (WITH SOME POST-CONSUMER RECYCLED CONTENT)

PLAN
GRASSPAVE2 SQUARES
ADJACENT GRASSPAVE2 SQUARES
SEE ENLARGEMENT BELOW
HYDROGROW MIX BELOW RING SUPPLIED FREE BY MANUFACTURER
RINGS FILLED WITH CONCRETE SAND (CLEAN, SHARP SAND)
COMPACTED SANDY GRAVEL ROAD BASE 95% MODIFIED PROCTOR DENSITY - 6 INCHES TO 12 INCHES (DEPTH OF BASE COURSE TO BE DETERMINED BY ON-SITE ENGINEER)
COMPACTED SUBGRADE,

SECTION
TOP OF GRASS ROOT MASS 6 MM (1/4") ABOVE TOP OF RING
GRASSPAVE2 ATTACH WITH SNAP-FIT FASTENERS
ROOT MASS TO FILL GRASSPAVE2
COMPACTED SANDY GRAVEL BASE COURSE

ENLARGEMENT

NOTE: GRASS/PLANT TYPES SHALL BE SPECIFIED BY A LANDSCAPE ARCHITECT OR LANDSCAPE DESIGNER.

TYPICAL GRASSPAVE2 DETAIL

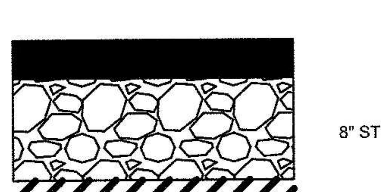

3" ASPHALT SURFACE (NCDOT SF9.5A)
8" STONE BASE (NCDOT TYPE "ABC")
COMPACTED SUBGRADE

TYPICAL PAVING SECTION

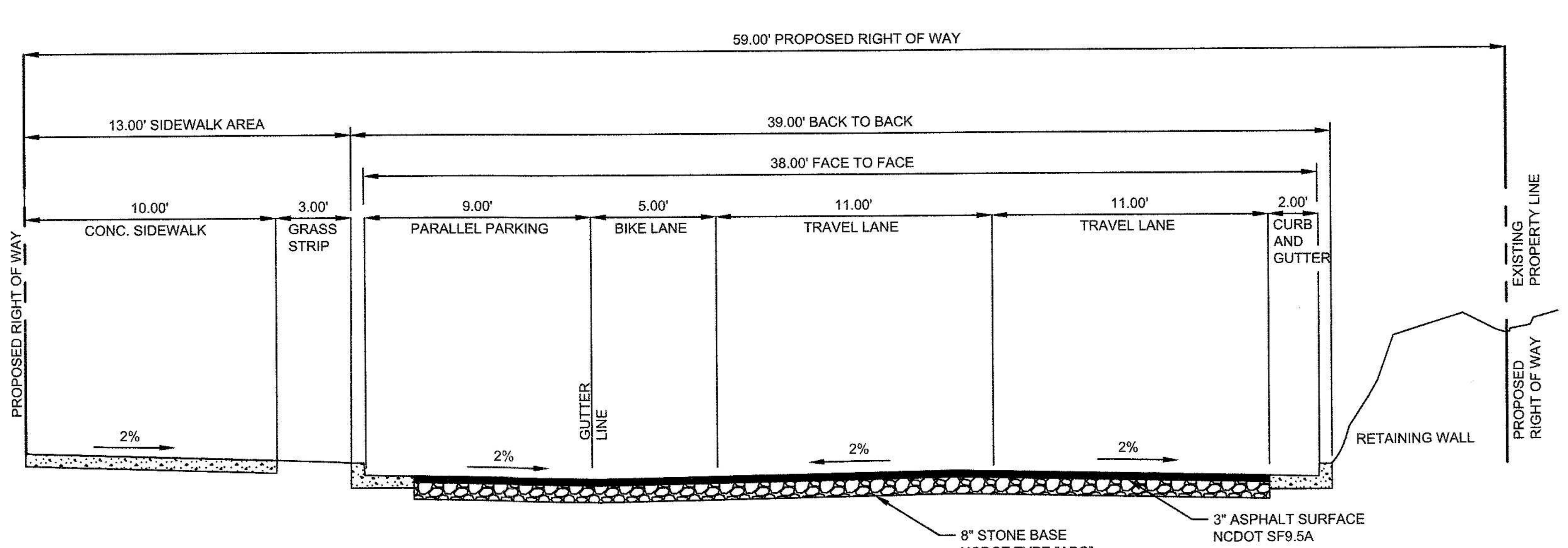

TYPICAL SECTION WITH PARALLEL PARKING
1" = 5'

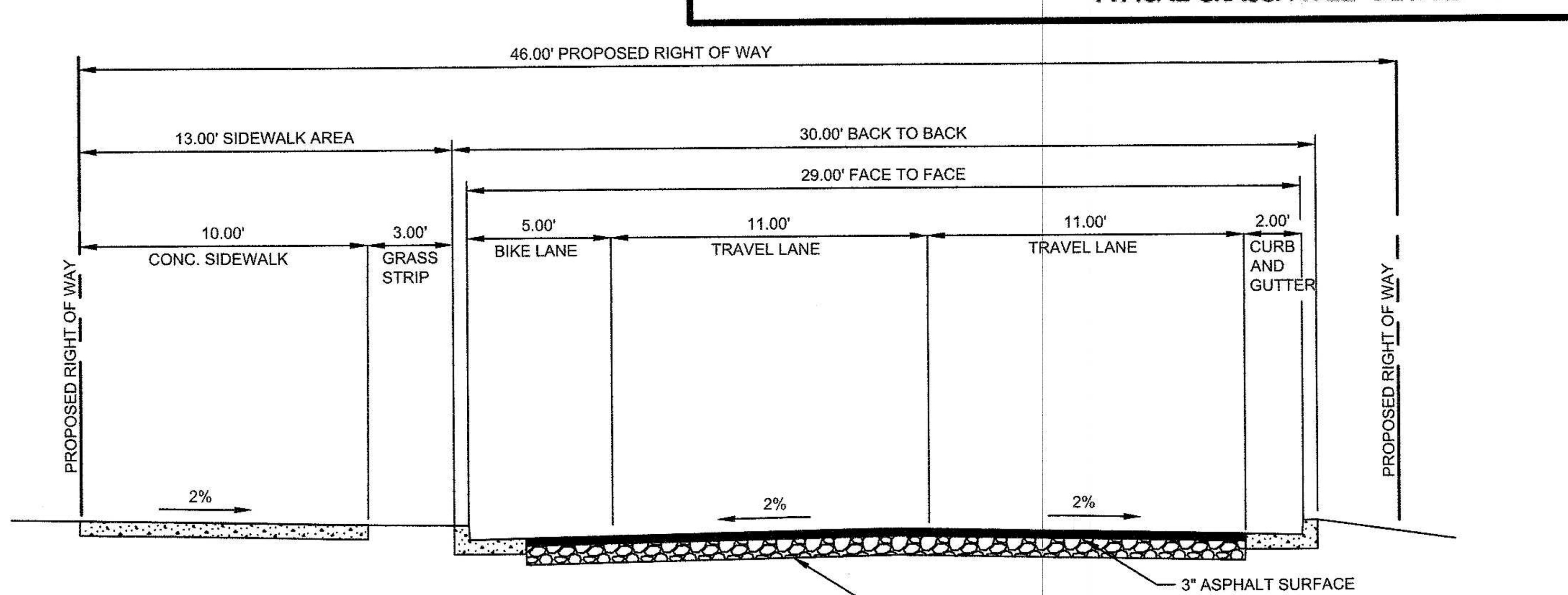

TYPICAL SECTION WITHOUT PARALLEL PARKING
1" = 5'

PHILIP POST & ASSOCIATES
A Division of Pennoni — Firm License F-1267
PENNONI ASSOCIATES INC.
401 Providence Road #200
Chapel Hill, NC 27514
T 919.929.1173 F 919.493.6548

ALL DIMENSIONS MUST BE VERIFIED BY CONTRACTOR AND OWNER MUST BE NOTIFIED OF ANY DISCREPANCIES BEFORE PROCEEDING WITH WORK

NORTH CAROLINA PROFESSIONAL ENGINEER SEAL 030517 TIMOTHY A. SMITH — 2-20-17

HILLSTONE CHAPEL HILL
1730 FORDHAM BLVD.
CHAPEL HILL, NORTH CAROLINA 27514

SITE DETAILS

LEON CAPITAL GROUP
5970 FAIRVIEW ROAD, SUITE 450
CHARLOTTE, NORTH CAROLINA 28210

DATE	NO.	REVISIONS	BY

ALL DOCUMENTS PREPARED BY PENNONI ASSOCIATES ARE INSTRUMENTS OF SERVICE IN RESPECT OF THE PROJECT. THEY ARE NOT INTENDED OR REPRESENTED TO BE SUITABLE FOR REUSE BY OWNER OR OTHERS ON THE EXTENSIONS OF THE PROJECT OR ON ANY OTHER PROJECT. ANY REUSE WITHOUT WRITTEN VERIFICATION OR ADAPTATION BY PENNONI ASSOCIATES FOR THE SPECIFIC PURPOSE INTENDED WILL BE AT OWNERS SOLE RISK AND WITHOUT LIABILITY OR LEGAL EXPOSURE TO PENNONI ASSOCIATES; AND OWNER SHALL INDEMNIFY AND HOLD HARMLESS PENNONI ASSOCIATES FROM ALL CLAIMS, DAMAGES, LOSSES AND EXPENSES ARISING OUT OF OR RESULTING THEREFROM.

PROJECT	LCGR1602
DATE	DECEMBER 7, 2016
DRAWING SCALE	1" = 30'
DRAWN BY	WRA
APPROVED BY	TAS

CS6001

P:\Projects\LCGRCOM\LCGR1602-Apartment Site\DESIGN_PUBLISH\CS6001.dwg PLOTTED: 2/15/2017 8:35 PM, BY: William Akin PLOTSTYLE: Pennoni NCS.stb PROJECT STATUS: DESIGN DEVELOPMENT

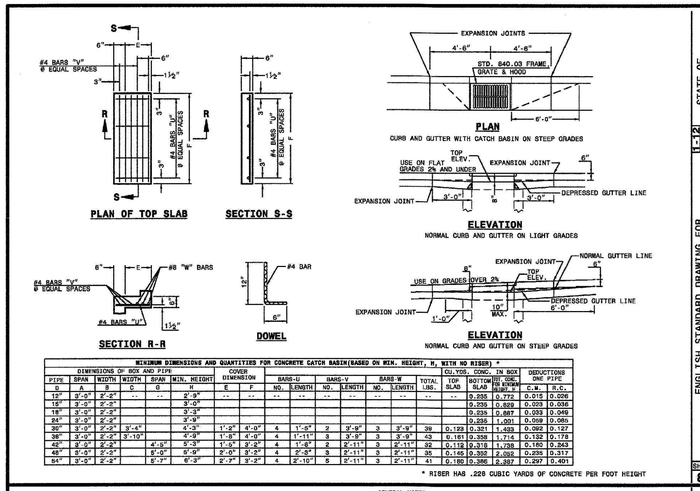

MINIMUM DIMENSIONS AND QUANTITIES FOR CONCRETE CATCH BASIN (BASED ON MIN. HEIGHT, H, WITH NO RISER) *

PIPE	DIMENSIONS OF BOX AND PIPE SPAN	WIDTH	COVER DIMENSION WIDTH	SPAN	MIN. HEIGHT	G	H	E	F	BARS-U NO.	LENGTH	BARS-V NO.	LENGTH	BARS-W NO.	LENGTH	TOTAL LBS.	TOP SLAB	BOTTOM SLAB	COL./VOL. CONC. IN BOX (CU. YDS.) C.Y.	R.C.	DEDUCTIONS ONE PIPE (CU. YDS.) C.Y.	R.C.
12"	3'-0"	2'-2"	--	--	2'-9"	--	--			--	--	--	--	--	--	--	0.235	0.772	0.015	0.026
15"	3'-0"	2'-2"			3'-0"												0.235	0.829	0.023	0.036
18"	3'-0"	2'-2"			3'-3"												0.235	0.887	0.033	0.046
24"	3'-0"	2'-2"			3'-9"												0.235	1.001	0.059	0.085
30"	3'-0"	2'-2"	3'-4"		4'-3"		1'-2"	4'-0"	4	1'-0"	2	3'-9"	3	3'-9"	39	0.129	0.371	1.483	0.092	0.127
36"	3'-0"	2'-2"	3'-10"		4'-9"		1'-8"	4'-0"	4	1'-11"	3	3'-9"	3	3'-9"	43	0.181	0.358	1.714	0.132	0.178
42"	3'-0"	2'-2"		4'-0"	5'-3"		1'-9"	3'-3"	4	1'-8"	2	2'-11"	3	2'-11"	32	0.119	0.318	1.238	0.160	0.243
48"	5'-0"	2'-2"		5'-0"	6'-9"		2'-0"	3'-2"	4	2'-5"	3	2'-11"	3	2'-11"	35	0.149	0.352	2.092	0.235	0.317
54"	3'-0"	2'-2"		5'-7"	6'-3"		2'-2"	3'-2"	4	2'-10"	5	2'-11"	3	2'-11"	41	0.180	0.386	2.387	0.297	0.401

* RISER HAS .228 CUBIC YARDS OF CONCRETE PER FOOT HEIGHT

STATE OF NORTH CAROLINA DEPT. OF TRANSPORTATION DIVISION OF HIGHWAYS RALEIGH, N.C.

1-12

ENGLISH STANDARD DRAWING FOR
CONCRETE CATCH BASIN
12" THRU 54" PIPE

SHEET 2 OF 2
840.02

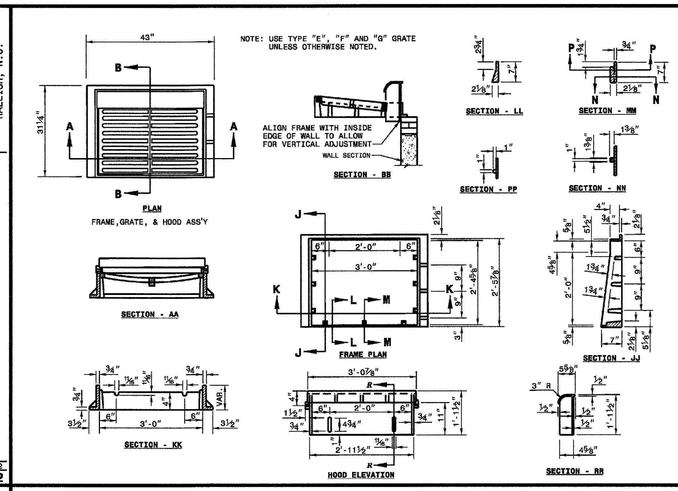

STATE OF NORTH CAROLINA DEPT. OF TRANSPORTATION DIVISION OF HIGHWAYS RALEIGH, N.C.

1-12

ENGLISH STANDARD DRAWING FOR
FRAME, GRATES, AND HOOD
FOR USE ON STANDARD CATCH BASIN

SHEET 1 OF 2
840.03

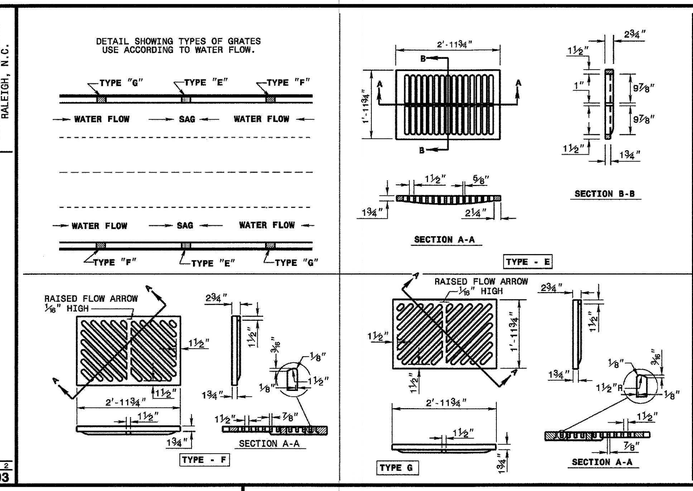

STATE OF NORTH CAROLINA DEPT. OF TRANSPORTATION DIVISION OF HIGHWAYS RALEIGH, N.C.

1-12

ENGLISH STANDARD DRAWING FOR
FRAME, GRATES, AND HOOD
FOR USE ON STANDARD CATCH BASIN

SHEET 2 OF 2
840.03

PHILIP POST & ASSOCIATES
A Division of Pennoni Firm License F-1267
PENNONI ASSOCIATES INC.
401 Providence Road #200
Chapel Hill, NC 27514
T 919.929.1173 F 919.493.6548

ALL DIMENSIONS MUST BE VERIFIED BY CONTRACTOR AND OWNER MUST BE NOTIFIED OF ANY DISCREPANCIES BEFORE PROCEEDING WITH WORK

PROFESSIONAL SEAL 030517 ENGINEER TIMOTHY A. SMITH 2-20-17

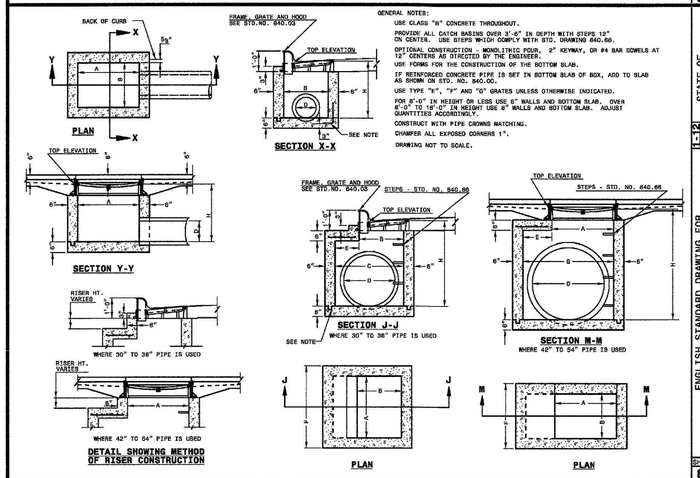

GENERAL NOTES:
USE CLASS "B" CONCRETE THROUGHOUT.
PROVIDE ALL CATCH BASINS OVER 3'-6" IN DEPTH WITH STEPS 12" ON CENTER. USE STEPS WHICH COMPLY WITH STD. DRAWING 840.66.
OPTIONAL CONSTRUCTION MONOLITHIC POUR. 2" KEYWAY, OR #4 BAR DOWELS AT 12" CENTERS AS DIRECTED BY THE ENGINEER.
USE FORMS FOR THE CONSTRUCTION OF THE BOTTOM SLAB.
IF REINFORCED CONCRETE PIPE IS SET IN BOTTOM SLAB OF BOX, ADD TO SLAB AS SHOWN ON STD. NO. 840.00.
USE TYPE "V", "F" AND "G" GRATES UNLESS OTHERWISE INDICATED.
FOR 3'-0" IN HEIGHT OR LESS USE 6" WALLS AND BOTTOM SLAB. OVER 3'-0" TO 16'-0" IN HEIGHT USE 8" WALLS AND BOTTOM SLAB. ADJUST QUANTITIES ACCORDINGLY.
CONSTRUCT WITH PIPE CROWNS MATCHING.
CHAMFER ALL EXPOSED CORNERS 1".
DRAWING NOT TO SCALE.

STATE OF NORTH CAROLINA DEPT. OF TRANSPORTATION DIVISION OF HIGHWAYS RALEIGH, N.C.

1-12

ENGLISH STANDARD DRAWING FOR
CONCRETE CATCH BASIN
12" THRU 54" PIPE

SHEET 1 OF 2
840.02

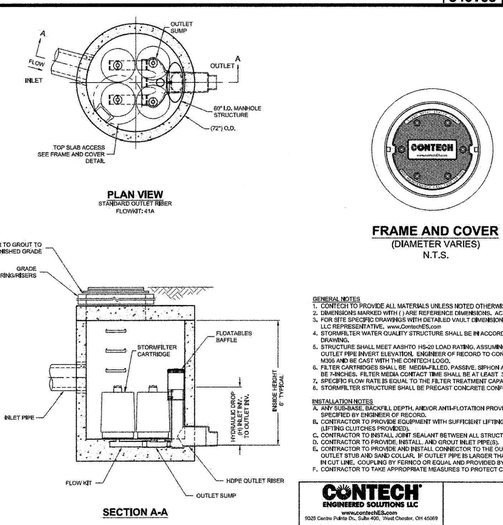

GENERAL NOTES
1. CONTECH TO PROVIDE ALL MATERIALS UNLESS NOTED OTHERWISE.
2. DIMENSIONS MARKED WITH () ARE REFERENCE DIMENSIONS. ACTUAL DIMENSIONS MAY VARY.
3. FOR SITE SPECIFIC DRAWINGS WITH DETAILED VAULT DIMENSIONS AND WEIGHTS, PLEASE CONTACT YOUR CONTECH ENGINEERED SOLUTIONS LLC REPRESENTATIVE. www.ContechES.com
4. STORMFILTER WATER QUALITY STRUCTURE SHALL BE IN ACCORDANCE WITH ALL DESIGN DATA AND INFORMATION CONTAINED IN THIS DRAWING.
5. STRUCTURE SHALL MEET AASHTO HS-20 LOAD RATING, ASSUMING EARTH COVER OF 0' - 2' AND GROUNDWATER ELEVATION AT, OR BELOW, THE OUTLET PIPE INVERT ELEVATION. ENGINEER OF RECORD TO CONFIRM ACTUAL GROUNDWATER ELEVATION. CASTINGS SHALL MEET AASHTO M306 AND BE CAST WITH THE CONTECH LOGO.
6. FILTER CARTRIDGES SHALL BE MEDIA-FILLED, PASSIVE, SIPHON ACTUATED, RADIAL FLOW, AND SELF CLEANING. RADIAL MEDIA DEPTH SHALL BE 7-INCHES. FILTER MEDIA CONTACT TIME SHALL BE AT LEAST 35 SECONDS.
7. SPECIFIC FLOW RATE IS EQUAL TO THE FILTER TREATMENT CAPACITY (gpm) DIVIDED BY THE FILTER CONTACT SURFACE AREA (sq.ft).
8. STORMFILTER STRUCTURE SHALL BE PRECAST CONCRETE CONFORMING TO ASTM C-478 AND AASHTO LOAD FACTOR DESIGN METHOD.

INSTALLATION NOTES
A. ANY SUB-BASE, BACKFILL DEPTH, AND/OR ANTI-FLOTATION PROVISIONS ARE SITE-SPECIFIC DESIGN CONSIDERATIONS AND SHALL BE SPECIFIED BY ENGINEER OF RECORD.
B. CONTRACTOR TO PROVIDE EQUIPMENT WITH SUFFICIENT LIFTING AND REACH CAPACITY TO LIFT AND SET THE STORMFILTER STRUCTURE (LIFTING CLUTCHES PROVIDED).
C. CONTRACTOR TO INSTALL JOINT SEALANT BETWEEN ALL STRUCTURE SECTIONS AND ASSEMBLE STRUCTURE.
D. CONTRACTOR TO PROVIDE, INSTALL, AND GROUT INLET PIPE(S).
E. CONTRACTOR TO PROVIDE AND INSTALL CONNECTOR TO THE OUTLET RISER STUB. STORMFILTER EQUIPPED WITH A DUAL DIAMETER HDPE OUTLET STUB AND SAND COLLAR. IF OUTLET PIPE IS LARGER THAN 8 INCHES, CONTRACTOR TO REMOVE THE 8 INCH OUTLET STUB AT MOLDED IN CUT LINE. COUPLING BY FERNCO OR EQUAL AND PROVIDED BY CONTRACTOR.
F. CONTRACTOR TO TAKE APPROPRIATE MEASURES TO PROTECT CARTRIDGES FROM CONSTRUCTION-RELATED EROSION RUNOFF.

CONTECH ENGINEERED SOLUTIONS LLC
www.contechES.com
9025 Centre Pointe Dr., Suite 400, West Chester, OH 45069
800-338-1122 513-645-7000 513-645-7993 FAX

SFMH60
STORMFILTER
STANDARD DETAIL

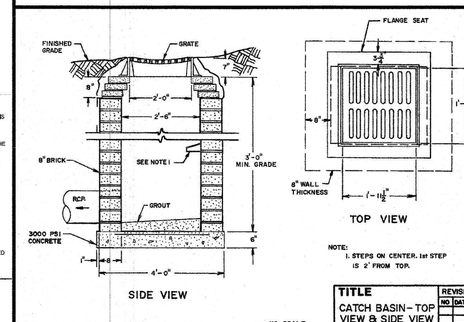

NO SCALE

ENGINEERING DEPARTMENT STANDARD DETAILS

TITLE	REVISIONS	DET.NO.
CATCH BASIN-TOP VIEW & SIDE VIEW	NO DATE BY	SD-6

HILLSTONE CHAPEL HILL

1730 FORDHAM BLVD.
CHAPEL HILL, NORTH CAROLINA 27514

DRAINAGE DETAILS

LEON CAPITAL GROUP
5970 FAIRVIEW ROAD, SUITE 450
CHARLOTTE, NORTH CAROLINA 28210

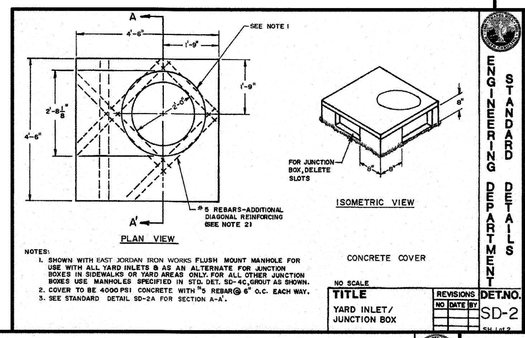

NOTES:
1. SHOWN WITH EAST JORDAN IRON WORKS FLUSH MOUNT MANHOLE FOR USE WITH ALL YARD INLETS & AS AN ALTERNATE FOR JUNCTION BOXES IN SIDEWALKS OR YARD AREAS ONLY. FOR ALL OTHER JUNCTION BOXES USE MANHOLES SPECIFIED IN STD. DET. SD-4C, GROUT AS SHOWN.
2. COVER TO BE 4000 PSI CONCRETE WITH #5 REBAR @ 6" O.C. EACH WAY.
3. SEE STANDARD DETAIL SD-2A FOR SECTION A-A'.

NO SCALE

ENGINEERING DEPARTMENT STANDARD DETAILS

TITLE	REVISIONS	DET.NO.
YARD INLET/ JUNCTION BOX	NO DATE BY	SD-2 SH 1 of 2

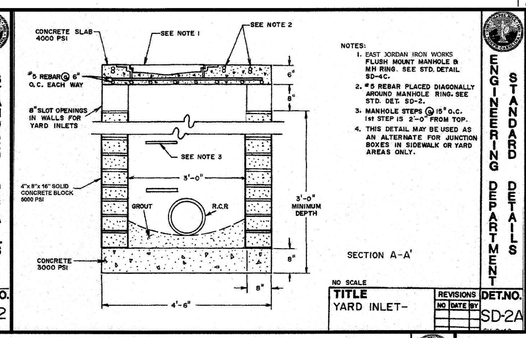

NOTES:
1. EAST JORDAN IRON WORKS FLUSH MOUNT MANHOLE & MH RING. SEE STD. DETAIL SD-4C.
2. #5 REBAR PLACED DIAGONALLY AROUND MANHOLE RING. SEE STD. DET. SD-2.
3. MANHOLE STEPS @ 15" o.c. 1st STEP IS 2'-0" FROM TOP.
4. THIS DETAIL MAY BE USED AS AN ALTERNATE FOR JUNCTION BOXES IN SIDEWALK OR YARD AREAS ONLY.

NO SCALE

ENGINEERING DEPARTMENT STANDARD DETAILS

TITLE	REVISIONS	DET.NO.
YARD INLET-	NO DATE BY	SD-2A

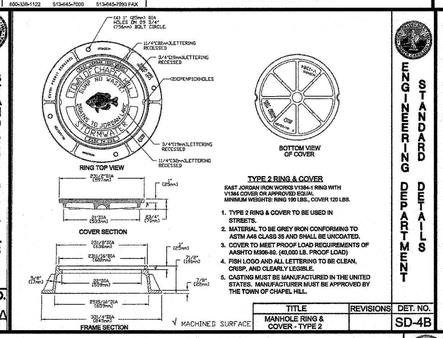

TYPE 2 RING & COVER
EAST JORDAN IRON WORKS V1384-1 RING WITH V1384 COVER OR APPROVED EQUAL
MINIMUM WEIGHTS: RING 190 LBS., COVER 120 LBS.

1. TYPE 2 RING & COVER TO BE USED IN STREETS.
2. MATERIAL TO BE GREY IRON CONFORMING TO ASTM A48 CLASS 35 AND SHALL BE UNCOATED.
3. COVER TO MEET PROOF LOAD REQUIREMENTS OF AASHTO M306-89. (40,000 LB. PROOF LOAD)
4. FISH LOGO AND ALL LETTERING TO BE CLEAN, CRISP, AND CLEARLY LEGIBLE.
5. CASTING MUST BE MANUFACTURED IN THE UNITED STATES. MANUFACTURER MUST BE APPROVED BY THE TOWN OF CHAPEL HILL.

ENGINEERING DEPARTMENT STANDARD DETAILS

TITLE	REVISIONS	DET. NO.
MANHOLE RING & COVER - TYPE 2	NO DATE BY	SD-4B

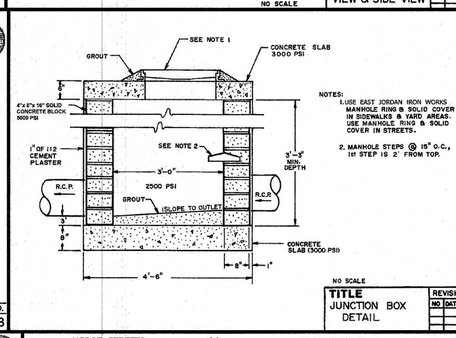

NOTES:
1. USE EAST JORDAN IRON WORKS MANHOLE RING & SOLID COVER IN SIDEWALKS & YARD AREAS. USE MANHOLE RING & SOLID COVER IN STREETS.
2. MANHOLE STEPS @ 15" o.c., 1st STEP IS 2' FROM TOP.

NO SCALE

ENGINEERING DEPARTMENT STANDARD DETAILS

TITLE	REVISIONS	DET.NO.
JUNCTION BOX DETAIL	NO DATE BY	SD-3

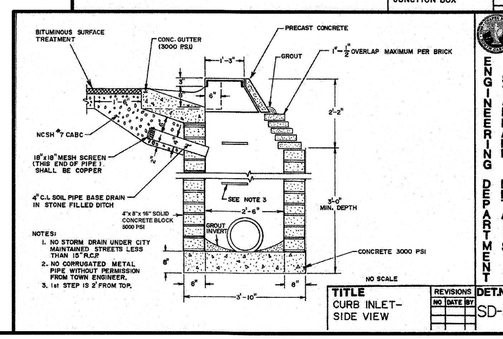

NOTES:
1. NO STORM DRAIN UNDER CITY MAINTAINED STREETS LESS THAN 15" R.C.P.
2. NO CORRUGATED METAL PIPE WITHOUT PERMISSION FROM TOWN ENGINEER.
3. 1st STEP IS 2' FROM TOP.

NO SCALE

ENGINEERING DEPARTMENT STANDARD DETAILS

TITLE	REVISIONS	DET.NO.
CURB INLET- SIDE VIEW	NO DATE BY	SD-5

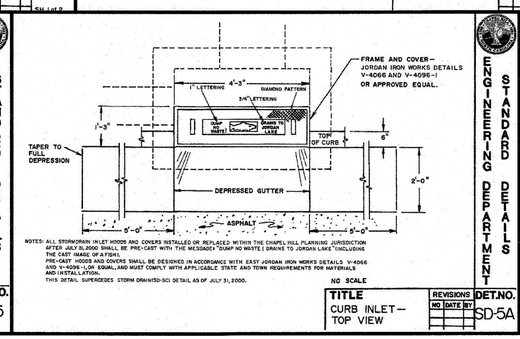

NOTES: ALL STORMDRAIN INLET HOODS AND COVERS INSTALLED OR REPLACED WITHIN THE CHAPEL HILL PLANNING JURISDICTION AFTER JULY 31, 2000 SHALL BE PRE-CAST WITH THE MESSAGE: "DUMP NO WASTE! DRAINS TO JORDAN LAKE" (INCLUDING THE CAST IMAGE OF A FISH).
PRE-CAST HOODS AND COVERS SHALL BE DESIGNED IN ACCORDANCE WITH EAST JORDAN IRON WORKS DETAILS V-4066 AND V-4096-1,OR EQUAL, AND MUST COMPLY WITH APPLICABLE STATE AND TOWN REQUIREMENTS FOR MATERIALS AND INSTALLATION.
THIS DETAIL SUPERCEDES STORM DRAIN/SD-5C1 DETAIL AS OF JULY 31, 2000.

NO SCALE

ENGINEERING DEPARTMENT STANDARD DETAILS

TITLE	REVISIONS	DET.NO.
CURB INLET- TOP VIEW	NO DATE BY	SD-5A

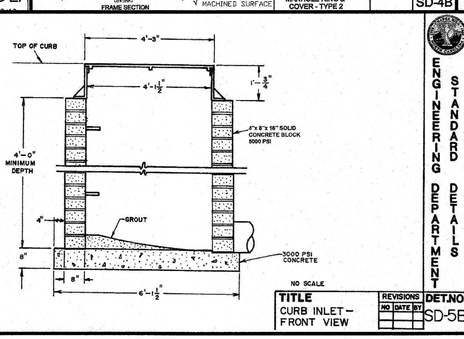

NO SCALE

ENGINEERING DEPARTMENT STANDARD DETAILS

TITLE	REVISIONS	DET.NO.
CURB INLET- FRONT VIEW	NO DATE BY	SD-5B

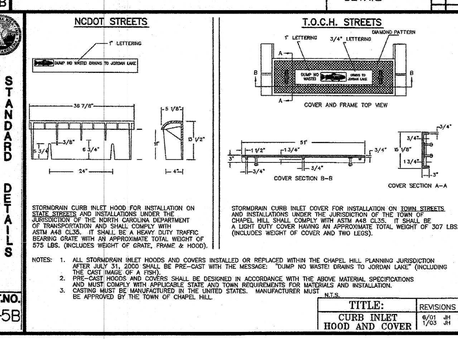

STORMDRAIN CURB INLET HOOD FOR INSTALLATION ON STATE STREETS AND INSTALLATIONS UNDER THE JURISDICTION OF THE NORTH CAROLINA DEPARTMENT OF TRANSPORTATION AND SHALL COMPLY WITH ASTM A48 CLSS. IT SHALL BE A HEAVY DUTY TRAFFIC BEARING GRATE WITH AN APPROXIMATE TOTAL WEIGHT OF 275 LBS. (INCLUDES WEIGHT OF GRATE, FRAME & HOOD).

STORMDRAIN CURB INLET COVER FOR INSTALLATION ON TOWN STREETS AND INSTALLATIONS UNDER THE JURISDICTION OF THE TOWN OF CHAPEL HILL SHALL COMPLY WITH ASTM A48 CLSS. IT SHALL BE A LIGHT DUTY COVER HAVING AN APPROXIMATE TOTAL WEIGHT OF 307 LBS. (INCLUDES WEIGHT OF COVER AND TWO LEGS).

NOTES: 1. ALL STORMDRAIN INLET HOODS AND COVERS INSTALLED OR REPLACED WITHIN THE CHAPEL HILL PLANNING JURISDICTION AFTER JULY 31, 2000 SHALL BE PRE-CAST WITH THE MESSAGE: "DUMP NO WASTE! DRAINS TO JORDAN LAKE" (INCLUDING THE CAST IMAGE OF A FISH).
2. PRE-CAST HOODS AND COVERS SHALL BE DESIGNED IN ACCORDANCE WITH THE ABOVE MATERIAL SPECIFICATIONS AND MUST COMPLY WITH APPLICABLE STATE AND TOWN REQUIREMENTS FOR MATERIALS AND INSTALLATION.
3. CASTING MUST BE MANUFACTURED IN THE UNITED STATES. MANUFACTURER MUST BE APPROVED BY THE TOWN OF CHAPEL HILL.

N.T.S.

ENGINEERING DEPARTMENT STANDARD DETAILS

TITLE:	REVISIONS	DET.NO.
CURB INLET HOOD AND COVER	6/03 JH	SD-5C

			BY
			REVISIONS
			NO.
			DATE

ALL DOCUMENTS PREPARED BY PENNONI ASSOCIATES ARE INSTRUMENTS OF SERVICE IN RESPECT OF THE PROJECT. THEY ARE NOT INTENDED OR REPRESENTED TO BE SUITABLE FOR REUSE BY OWNER OR OTHERS ON THE EXTENSIONS OF THE PROJECT OR ON ANY OTHER PROJECT. ANY REUSE WITHOUT WRITTEN VERIFICATION OR ADAPTATION BY PENNONI ASSOCIATES FOR THE SPECIFIC PURPOSE INTENDED WILL BE AT OWNERS SOLE RISK AND WITHOUT LIABILITY OR LEGAL EXPOSURE TO PENNONI ASSOCIATES; AND OWNER SHALL INDEMNIFY AND HOLD HARMLESS PENNONI ASSOCIATES FROM ALL CLAIMS, DAMAGES, LOSSES AND EXPENSES ARISING OUT OF OR RESULTING THEREFROM.

PROJECT	LCGR1602
DATE	DECEMBER 7, 2016
DRAWING SCALE	1" = 30'
DRAWN BY	WRA
APPROVED BY	TAS

CS6021

SHEET 19 OF 25

P:\Projects\CGRCOM\LCGR1602-Apartment Site\DESIGN_B\BLISH\CS6021.dwg PLOTTED: 2/10/2017 8:40 PM, BY: William Akin PLOTSTYLE: Pennoni.NCS.ctb PROJECT STATUS: DESIGN DEVELOPMENT

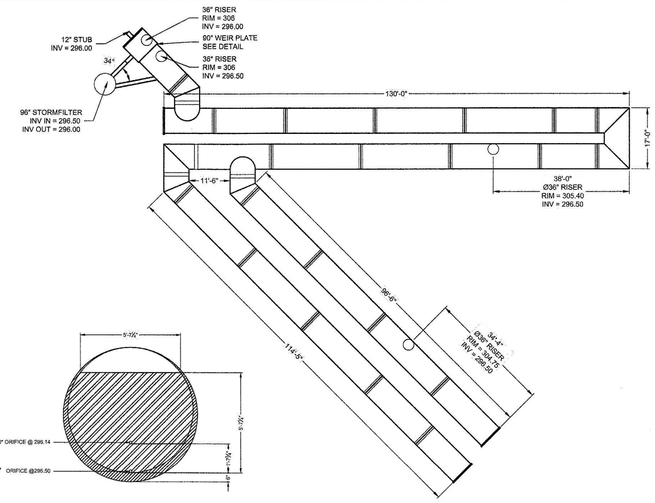

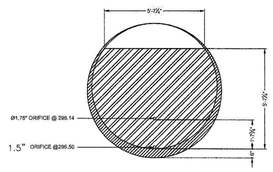

ASSEMBLY

SCALE: 1" = 20'
PIPE STORAGE: 20,070 CF
LOADING: H20/H25
PIPE INV. = 296.50'±

THE UNDERSIGNED HEREBY APPROVES THE ATTACHED (3) PAGES INCLUDING THE FOLLOWING:

- **PIPE STORAGE = 20,070 CF**
- **MAINLINE PIPE GAGE = 14**
- **WALL TYPE = SOLID**
- **DIAMETER = 84"**
- **FINISH = ALT2**
- **CORRUGATION = 5x1**

CUSTOMER _____ DATE _____

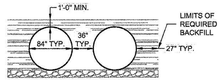

TYPICAL SECTION VIEW

SCALE: N.T.S.

NOTES

- ALL RISER AND STUB DIMENSIONS ARE TO CENTERLINE.
- ALL ELEVATIONS, DIMENSIONS, AND LOCATIONS OF RISERS AND INLETS, SHALL BE VERIFIED BY THE ENGINEER OF RECORD PRIOR TO RELEASING FOR FABRICATION.
- ALL FITTINGS AND REINFORCEMENT COMPLY WITH ASTM A998.
- ALL RISERS AND STUBS ARE 2⅔" x ½" CORRUGATION AND 16 GAGE UNLESS OTHERWISE NOTED.
- RISERS TO BE FIELD TRIMMED TO GRADE AS REQUIRED, BY CONTRACTOR.
- QUANTITY OF PIPE SHOWN DOES NOT PROVIDE EXTRA PIPE FOR CONNECTING THE SYSTEM TO EXISTING PIPE OR DRAINAGE STRUCTURES. OUR SYSTEM AS DETAILED PROVIDES NOMINAL INLET AND/OR OUTLET PIPE STUB FOR CONNECTION TO EXISTING DRAINAGE FACILITIES. IF ADDITIONAL PIPE IS NEEDED IT IS THE RESPONSIBILITY OF THE CONTRACTOR.

The design and information shown on this drawing is provided as a service to the project owner, engineer and contractor by Contech Engineered Solutions LLC ("Contech"). Neither this drawing, nor any part thereof, may be used, reproduced or modified in any manner without the prior written consent of Contech. Failure to comply is done at the other parties own risk. Contech expressly disclaims any liability or responsibility for such use.

If discrepancies between the supplied information upon which the drawing is based and actual field conditions are encountered as site work progresses, these discrepancies must be reported to Contech immediately for re-evaluation of the design. Contech assumes no liability for designs based on missing, inaccurate or inadequate information supplied by others.

MARK	DATE	REVISION DESCRIPTION	BY

CONTECH® ENGINEERED SOLUTIONS LLC
www.ContechES.com
9025 Centre Pointe Dr., Suite 400, West Chester, OH 45069
800-338-1122 513-645-7000 513-645-7993 FAX

CONTECH® CMP DETENTION SYSTEMS
CONTECH PROPOSAL DRAWING

84" UNDERGROUND DETENTION SYSTEM - 553890-030
HILLSTONE APARTMENTS
CHAPEL HILL, NC
SITE DESIGNATION: EAST

PROJECT No.: 553890	SEQ. No.: 030	DATE: 2/13/2017
DESIGNED: KMR	DRAWN: KMR	
CHECKED:	APPROVED:	
SHEET NO.: P1 OF 3		

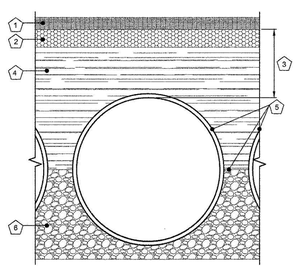

KEY:

1. RIGID OR FLEXIBLE PAVEMENT
2. GRANULAR ROAD BASE
3. 12" MIN. FOR DIAMETERS THROUGH 96" 18" MIN. FOR DIAMETERS FROM 102" AND LARGER MEASURED TO TOP OF RIGID OR BOTTOM OF FLEXIBLE PAVEMENT.
4. SELECT GRANULAR FILL PER AASHTO M145 A-1, A-2 OR A-3 OR APPROVED EQUAL. PLACED IN 8" LIFTS (COMPACTED TO MIN. 90% STANDARD DENSITY PER AASHTO T-99.)
5. CONTECH C-40 OR C-45 NON-WOVEN GEOTEXTILE IF REQUIRED BY ENGINEER OF RECORD TO PREVENT SOIL MIGRATION.
6. GRANULAR BEDDING, ROUGHLY SHAPED TO FIT THE BOTTOM OF PIPE, FROM SPRINGLINE OF PIPE TO 4"-6" BELOW BOTTOM OF PIPE. (STONE OR OTHER SUITABLE GRANULAR MATERIAL USED IN THIS SECTION SHALL ADHERE TO BACKFILL MATERIAL AND COMPACTION SPECIFICATION INDICATED BELOW)

FOUNDATION/BEDDING PREPARATION

PRIOR TO PLACING THE BEDDING, THE FOUNDATION MUST BE CONSTRUCTED TO A UNIFORM AND STABLE GRADE. IN THE EVENT THAT UNSUITABLE FOUNDATION MATERIALS ARE ENCOUNTERED DURING EXCAVATION, THEY SHALL BE REMOVED AND BROUGHT BACK TO THE GRADE WITH A FILL MATERIAL AS APPROVED BY THE ENGINEER. ONCE THE FOUNDATION PREPARATION IS COMPLETE, THE 4 INCHES OF A WELL-GRADED GRANULAR MATERIAL SHALL BE PLACED AS THE BEDDING.

BACKFILL

THE BACKFILL SHALL BE AN A1, A2 OR A3 GRANULAR FILL PER AASHTO M-145 OR A WELL-GRADED GRANULAR FILL AS APPROVED BY THE ENGINEER (SEE INSTALLATION GUIDELINES). THE MATERIAL SHALL BE PLACED IN 8-INCH LOOSE LIFTS AND COMPACTED TO 90% AASHTO T99 STANDARD PROCTOR DENSITY. WHEN PLACING THE FIRST LIFTS OF BACKFILL IT IS IMPORTANT TO MAKE SURE THAT THE BACKFILL IS PROPERLY COMPACTED UNDER AND AROUND THE PIPE HAUNCHES. BACKFILL SHALL BE PLACED SUCH THAT THERE IS NO MORE THAN A TWO LIFT (16") DIFFERENTIAL BETWEEN ANY OF THE PIPES AT ANY TIME DURING THE BACKFILL PROCESS. THE BACKFILL SHALL BE ADVANCED ALONG THE LENGTH OF THE DETENTION SYSTEM AT THE SAME RATE TO AVOID DIFFERENTIAL LOADING ON THE PIPE.

OTHER ALTERNATE BACKFILL MATERIAL MAY BE ALLOWED DEPENDING ON SITE SPECIFIC CONDITIONS. REFER TO TYPICAL BACKFILL DETAIL FOR MATERIAL REQUIRED.

BACKFILL DETAIL

SCALE: N.T.S.

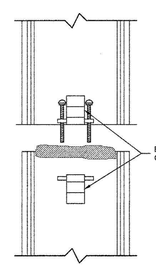

CONNECTION DETAIL
SINGLE
BOLT, BAR AND STRAP

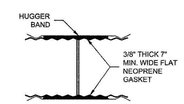

FLAT GASKET

GENERAL NOTES

1. BANDS ARE NORMALLY FURNISHED AS FOLLOWS:
   12" THRU 48", 1-PIECE
   54" THRU 96", 2-PIECE
   102" THRU 144", 3-PIECES
2. BAND FASTENERS ARE ATTACHED WITH SPOT WELDS, RIVETS OR HAND WELDS
3. REROLLED ANNULAR END CORRUGATIONS ARE NORMALLY 2⅔" x ½". DIMENSIONS ARE SUBJECT TO MANUFACTURING TOLERANCES

H-12 HUGGER BAND DETAIL

SCALE: N.T.S.

The design and information shown on this drawing is provided as a service to the project owner, engineer and contractor by Contech Engineered Solutions LLC ("Contech"). Neither this drawing, nor any part thereof, may be used, reproduced or modified in any manner without the prior written consent of Contech. Failure to comply is done at the other parties own risk. Contech expressly disclaims any liability or responsibility for such use.

If discrepancies between the supplied information upon which the drawing is based and actual field conditions are encountered as site work progresses, these discrepancies must be reported to Contech immediately for re-evaluation of the design. Contech assumes no liability for designs based on missing, inaccurate or inadequate information supplied by others.

MARK	DATE	REVISION DESCRIPTION	BY

CONTECH® ENGINEERED SOLUTIONS LLC
www.ContechES.com
9025 Centre Pointe Dr., Suite 400, West Chester, OH 45069
800-338-1122 513-645-7000 513-645-7993 FAX

CONTECH® CMP DETENTION SYSTEMS
CONTECH PROPOSAL DRAWING

84" UNDERGROUND DETENTION SYSTEM - 553890-030
HILLSTONE APARTMENTS
CHAPEL HILL, NC
SITE DESIGNATION: EAST

PROJECT No.: 553890	SEQ. No.: 030	DATE: 2/13/2017
DESIGNED: KMR	DRAWN: KMR	
CHECKED:	APPROVED:	
SHEET NO.: P2 OF 3		

PHILIP POST & ASSOCIATES
A Division of Pennoni Firm License F-1267
PENNONI ASSOCIATES INC.
401 Providence Road #200
Chapel Hill, NC 27514
T 919.929.1173 F 919.493.6548

ALL DIMENSIONS MUST BE VERIFIED BY CONTRACTOR AND OWNER MUST BE NOTIFIED OF ANY DISCREPANCIES BEFORE PROCEEDING WITH WORK

NORTH CAROLINA PROFESSIONAL SEAL 030517 ENGINEER TIMOTHY A. SMITH
2-20-17

HILLSTONE CHAPEL HILL
1730 FORDHAM BLVD.
CHAPEL HILL, NORTH CAROLINA 27514
UNDERGROUND DETENTION
EAST DETAILS

LEON CAPITAL GROUP
5970 FAIRVIEW ROAD, SUITE 450
CHARLOTTE, NORTH CAROLINA 28210

DATE	NO.	REVISIONS	BY

ALL DOCUMENTS PREPARED BY PENNONI ASSOCIATES ARE INSTRUMENTS OF SERVICE IN RESPECT OF THE PROJECT. THEY ARE NOT INTENDED OR REPRESENTED TO BE SUITABLE FOR REUSE BY OWNER OR OTHERS ON THE EXTENSIONS OF THE PROJECT OR ON ANY OTHER PROJECT. ANY REUSE WITHOUT WRITTEN VERIFICATION OR ADAPTATION BY PENNONI ASSOCIATES FOR THE SPECIFIC PURPOSE INTENDED WILL BE AT OWNERS SOLE RISK AND WITHOUT LIABILITY OR LEGAL EXPOSURE TO PENNONI ASSOCIATES; AND OWNER SHALL INDEMNIFY AND HOLD HARMLESS PENNONI ASSOCIATES FROM ALL CLAIMS, DAMAGES, LOSSES AND EXPENSES ARISING OUT OF OR RESULTING THEREFROM.

PROJECT	LCGR1602
DATE	DECEMBER 7, 2016
DRAWING SCALE	1" = 30'
DRAWN BY	WRA
APPROVED BY	TAS

CS6022

P:\Projects\LCGR\CGAL LCGR1602-Apartment Site\DESIGN_PUBLISH\CS6022.dwg PLOTTED: 2/15/2017 8:49 PM BY: William Allin PLOTSTYLE: Pennoni NCS.ctb PROJECT STATUS: DESIGN DEVELOPMENT