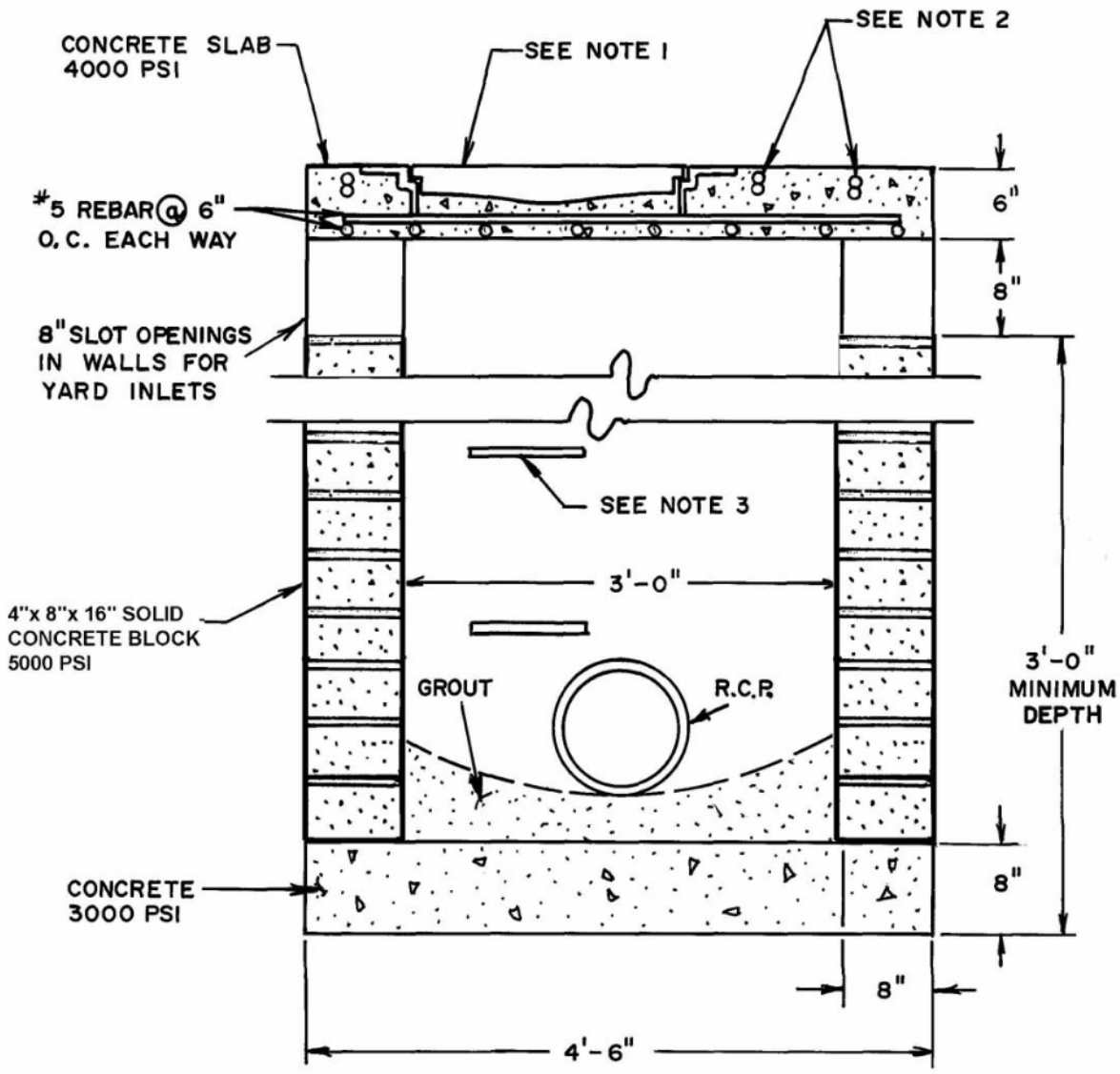

NOTES:

1. EAST JORDAN IRON WORKS FLUSH MOUNT MANHOLE & MH RING. SEE STD. DETAIL SD-4C.
2. #5 REBAR PLACED DIAGONALLY AROUND MANHOLE RING. SEE STD. DET. SD-2.
3. MANHOLE STEPS @ 15" O.C. 1st STEP IS 2'-0" FROM TOP.
4. THIS DETAIL MAY BE USED AS AN ALTERNATE FOR JUNCTION BOXES IN SIDEWALK OR YARD AREAS ONLY.

SECTION A-A'

NO SCALE

TITLE
YARD INLET-

REVISIONS		
NO	DATE	BY

ENGINEERING DEPARTMENT

STANDARD DETAILS

DET.NO.
SD-2A
SH. 2 of 2