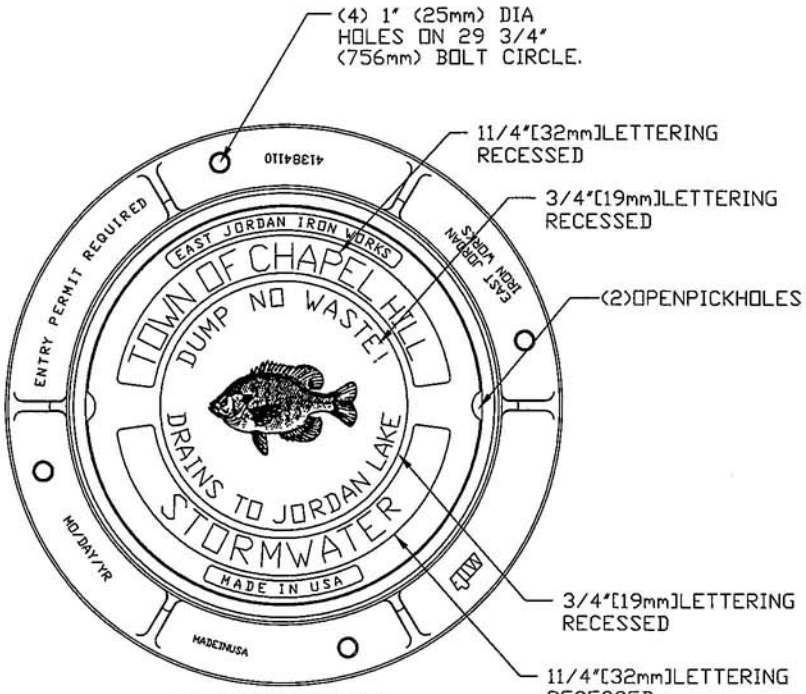

RING TOP VIEW

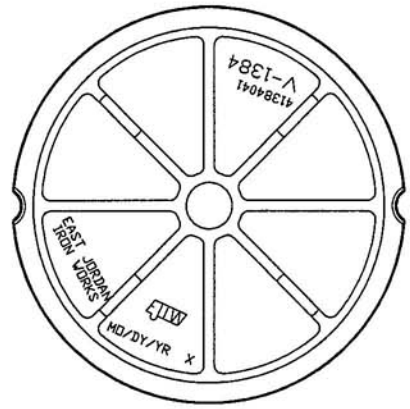

BOTTOM VIEW
OF COVER

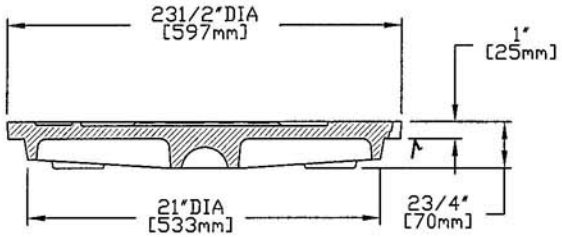

COVER SECTION

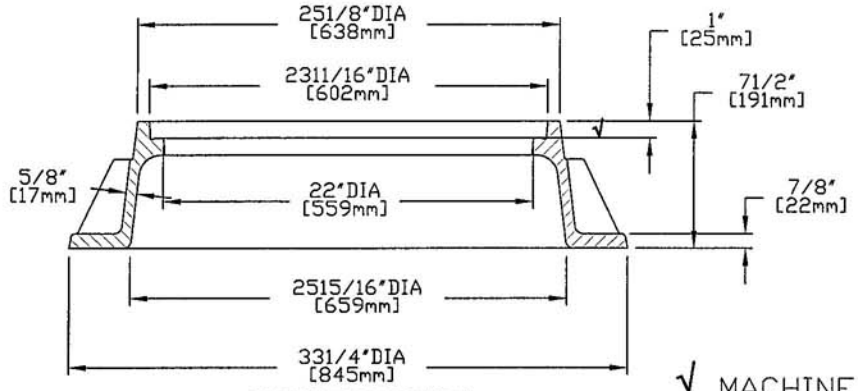

FRAME SECTION

√ MACHINED SURFACE

TYPE 2 RING & COVER

EAST JORDAN IRON WORKS V1384-1 RING WITH V1384 COVER OR APPROVED EQUAL
MINIMUM WEIGHTS: RING 190 LBS., COVER 120 LBS.

1. TYPE 2 RING & COVER TO BE USED IN STREETS.
2. MATERIAL TO BE GREY IRON CONFORMING TO ASTM A48 CLASS 35 AND SHALL BE UNCOATED.
3. COVER TO MEET PROOF LOAD REQUIREMENTS OF AASHTO M306-89. (40,000 LB. PROOF LOAD)
4. FISH LOGO AND ALL LETTERING TO BE CLEAN, CRISP, AND CLEARLY LEGIBLE.
5. CASTING MUST BE MANUFACTURED IN THE UNITED STATES. MANUFACTURER MUST BE APPROVED BY THE TOWN OF CHAPEL HILL.

ENGINEERING DEPARTMENT

STANDARD DETAILS

TITLE	REVISIONS	DET. NO.
MANHOLE RING & COVER - TYPE 2		SD-4B