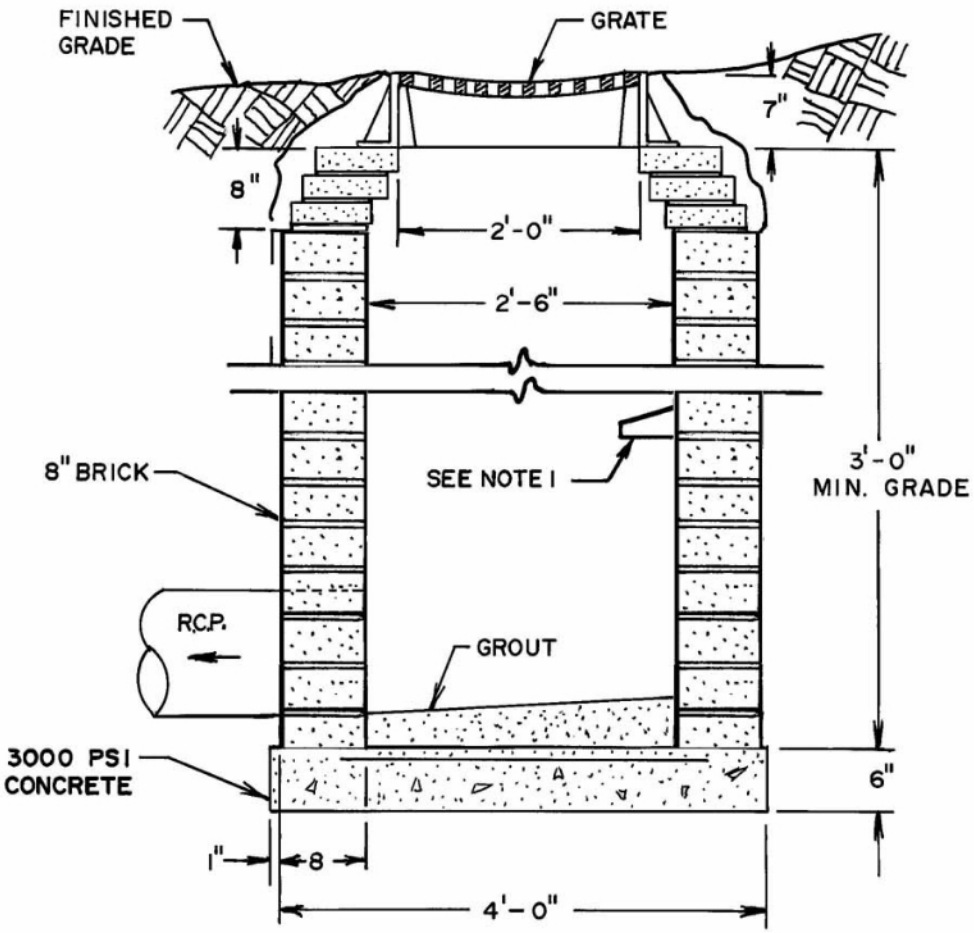

SIDE VIEW

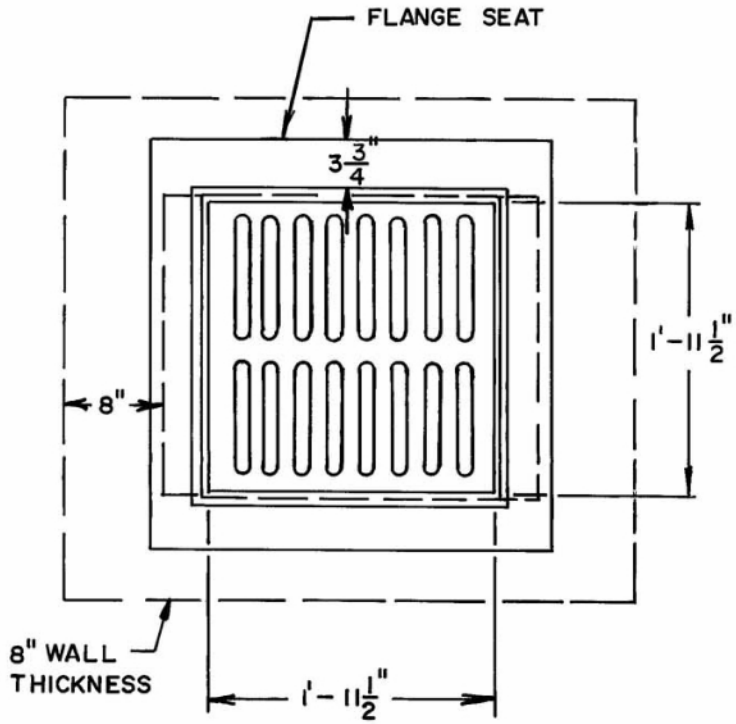

TOP VIEW

NOTE:

1. STEPS ON CENTER. 1st STEP IS 2' FROM TOP.

NO SCALE

ENGINEERING DEPARTMENT

STANDARD DETAILS

TITLE	REVISIONS			DET.NO
	NO	DATE	BY	
CATCH BASIN - TOP VIEW & SIDE VIEW				SD-6