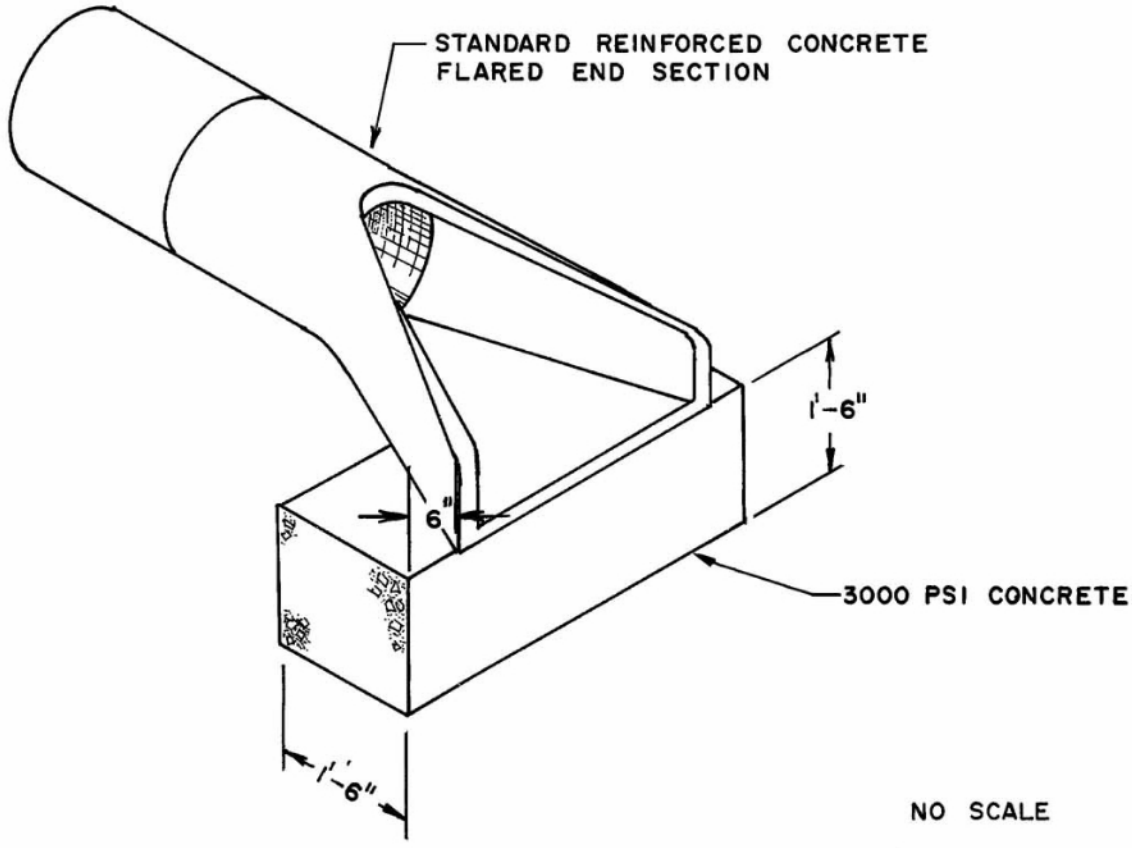

NO SCALE

ENGINEERING DEPARTMENT

STANDARD DETAILS

TITLE	REVISIONS			DET.NO.
	NO	DATE	BY	
FLARED END SECTION				SD-7