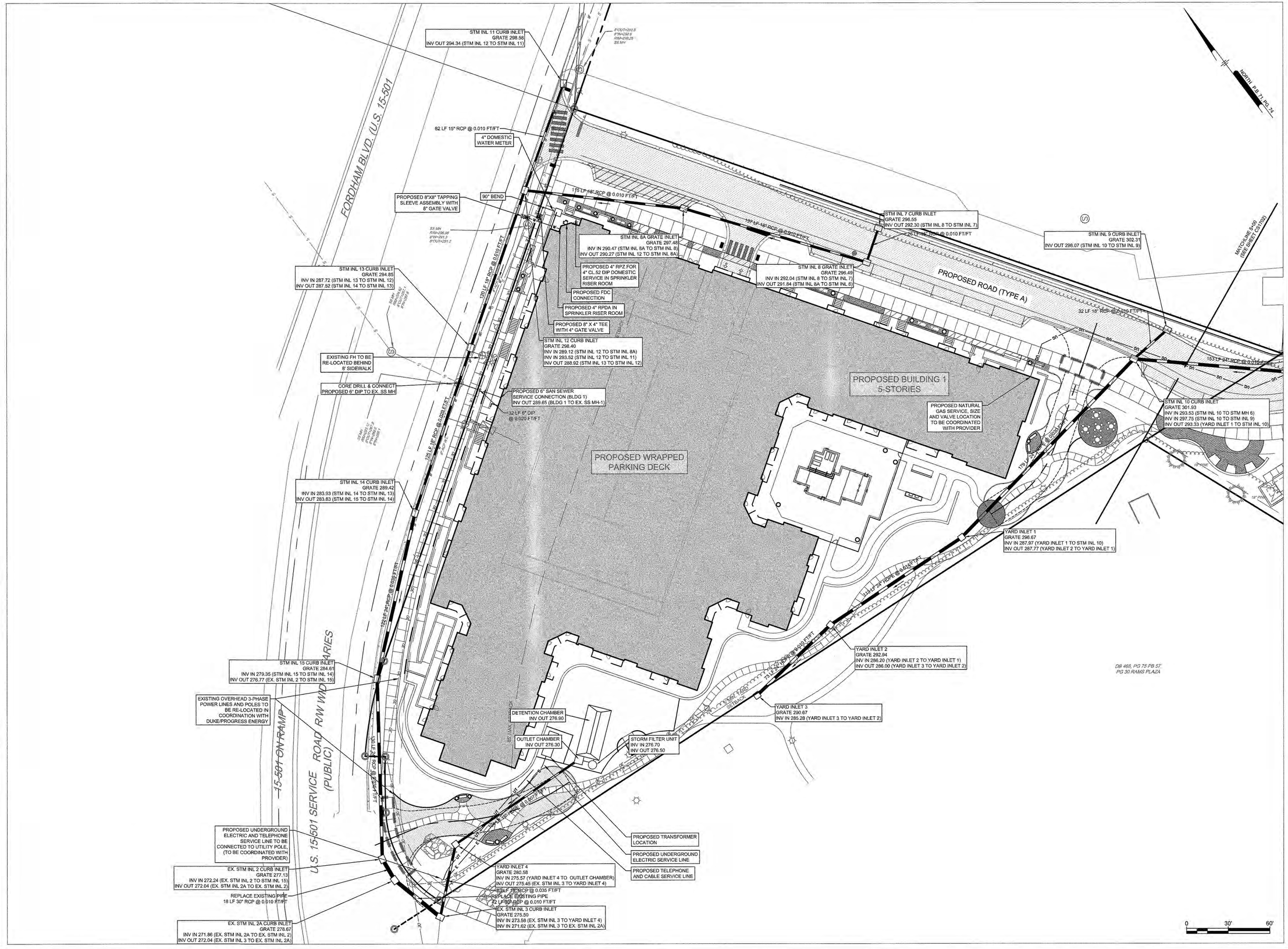

PHILIP POST & ASSOCIATES
A Division of Pennoni Firm License F-1297
PENNONI ASSOCIATES INC.
401 Providence Road #200
Chapel Hill, NC 27514
T 919.929.1173 F 919.493.6548

ALL DIMENSIONS MUST BE VERIFIED BY CONTRACTOR AND OWNER MUST BE NOTIFIED OF ANY DISCREPANCIES BEFORE PROCEEDING WITH WORK

NORTH CAROLINA PROFESSIONAL SEAL 030517 ENGINEER TIMOTHY A. SMITH
FOR PRELIMINARY REVIEW ONLY 8-16

HILLSTONE CHAPEL HILL

1739 FORDHAM BLVD.
CHAPEL HILL, NORTH CAROLINA 27514

UTILITY PLAN

LEON CAPITAL GROUP
5970 FAIRVIEW ROAD, SUITE 450
CHARLOTTE, NORTH CAROLINA 28210

DATE	NO.	REVISIONS	BY
#	#	#	#
#	#	#	#
#	#	#	#
#	#	#	#
#	#	#	#
#	#	#	#

ALL DOCUMENTS PREPARED BY PENNONI ASSOCIATES ARE INSTRUMENTS OF SERVICE IN RESPECT OF THE PROJECT. THEY ARE NOT INTENDED OR REPRESENTED TO BE SUITABLE FOR REUSE BY OWNER OR OTHERS ON THE EXTENSIONS OF THE PROJECT OR ON ANY OTHER PROJECT. ANY REUSE WITHOUT WRITTEN VERIFICATION OR ADAPTATION BY PENNONI ASSOCIATES FOR THE SPECIFIC PURPOSE INTENDED WILL BE AT OWNERS SOLE RISK AND WITHOUT LIABILITY OR LEGAL EXPOSURE TO PENNONI ASSOCIATE, AND OWNER SHALL INDEMNIFY AND HOLD HARMLESS PENNONI ASSOCIATES FROM ALL CLAIMS, DAMAGES, LOSSES AND EXPENSES ARISING OUT OF OR RESULTING THEREFROM.

PROJECT	LCGR1602
DATE	DECEMBER 7, 2016
DRAWING SCALE	1"= 30'
DRAWN BY	BF
APPROVED BY	TAS

CS1701

SHEET 11 OF 21

P:\Projects\CORCOAN\LCGR1602 Apartment Site\DESIGN_PUBLISH\CS1701.dwg PLOTTED: 12/8/2016 7:14 AM, BY: William Akin PLOTSTYLE: Pennoni NCS.ctb PROJECT STATUS: DESIGN DEVELOPMENT

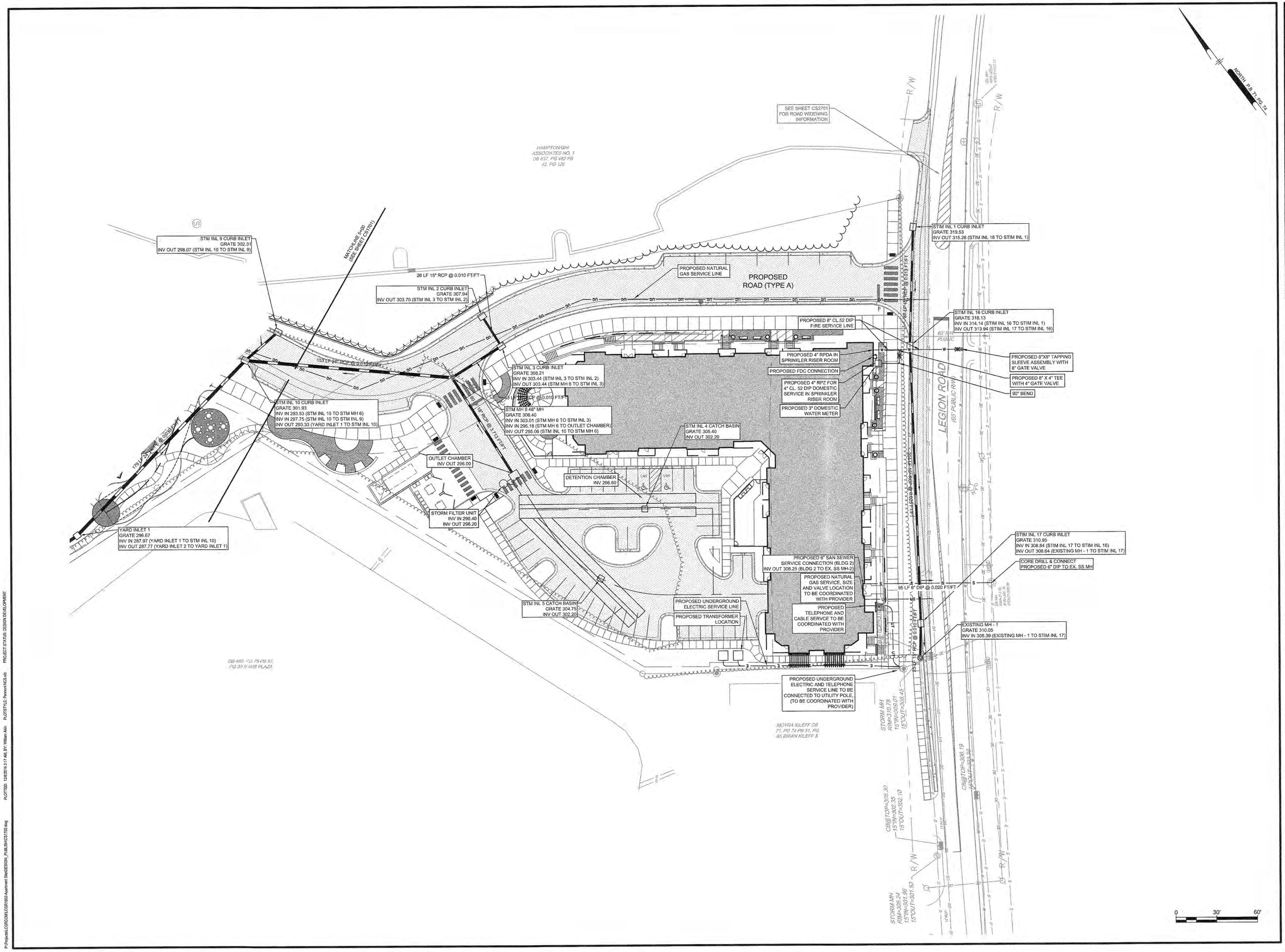

PHILIP POST & ASSOCIATES

A Division of Pennoni Firm License F-1287

PENNONI ASSOCIATES INC.
401 Providence Road #200
Chapel Hill, NC 27514
T 919.929.1173 F 919.493.6548

ALL DIMENSIONS MUST BE VERIFIED BY CONTRACTOR AND OWNER MUST BE NOTIFIED OF ANY DISCREPANCIES BEFORE PROCEEDING WITH WORK

NORTH CAROLINA PROFESSIONAL SEAL 030517 ENGINEER TIMOTHY A. SMITH 12-8-16

HILLSTONE CHAPEL HILL
1730 FORDHAM BLVD.
CHAPEL HILL, NORTH CAROLINA 27514

UTILITY PLAN

LEON CAPITAL GROUP
5970 FAIRVIEW ROAD, SUITE 450
CHARLOTTE, NORTH CAROLINA 28210

NO.	DATE	REVISIONS	BY

ALL DOCUMENTS PREPARED BY PENNONI ASSOCIATES ARE INSTRUMENTS OF SERVICE IN RESPECT OF THE PROJECT. THEY ARE NOT INTENDED OR REPRESENTED TO BE SUITABLE FOR REUSE BY OWNER OR OTHERS ON THE EXTENSIONS OF THE PROJECT OR ON ANY OTHER PROJECT. ANY REUSE WITHOUT WRITTEN VERIFICATION OR ADAPTATION BY PENNONI ASSOCIATES FOR THE SPECIFIC PURPOSE INTENDED WILL BE AT OWNERS SOLE RISK AND WITHOUT LIABILITY OR LEGAL EXPOSURE TO PENNONI ASSOCIATE; AND OWNER SHALL INDEMNIFY AND HOLD HARMLESS PENNONI ASSOCIATES FROM ALL CLAIMS, DAMAGES, LOSSES AND EXPENSES ARISING OUT OF OR RESULTING THEREFROM.

PROJECT	LCGR1602
DATE	DECEMBER 7, 2016
DRAWING SCALE	1" = 30'
DRAWN BY	BF
APPROVED BY	TAS

CS1702

SHEET 12 OF 21

P:\Projects\LCGR\COM\LCGR1602-Apartment Site\DESIGN_PUBLISH\CS1702.dwg PLOTTED: 12/8/2016 3:11 AM, BY: William Akin PLOT STYLE: Pennoni NCS.ctb PROJECT STATUS: DESIGN DEVELOPMENT

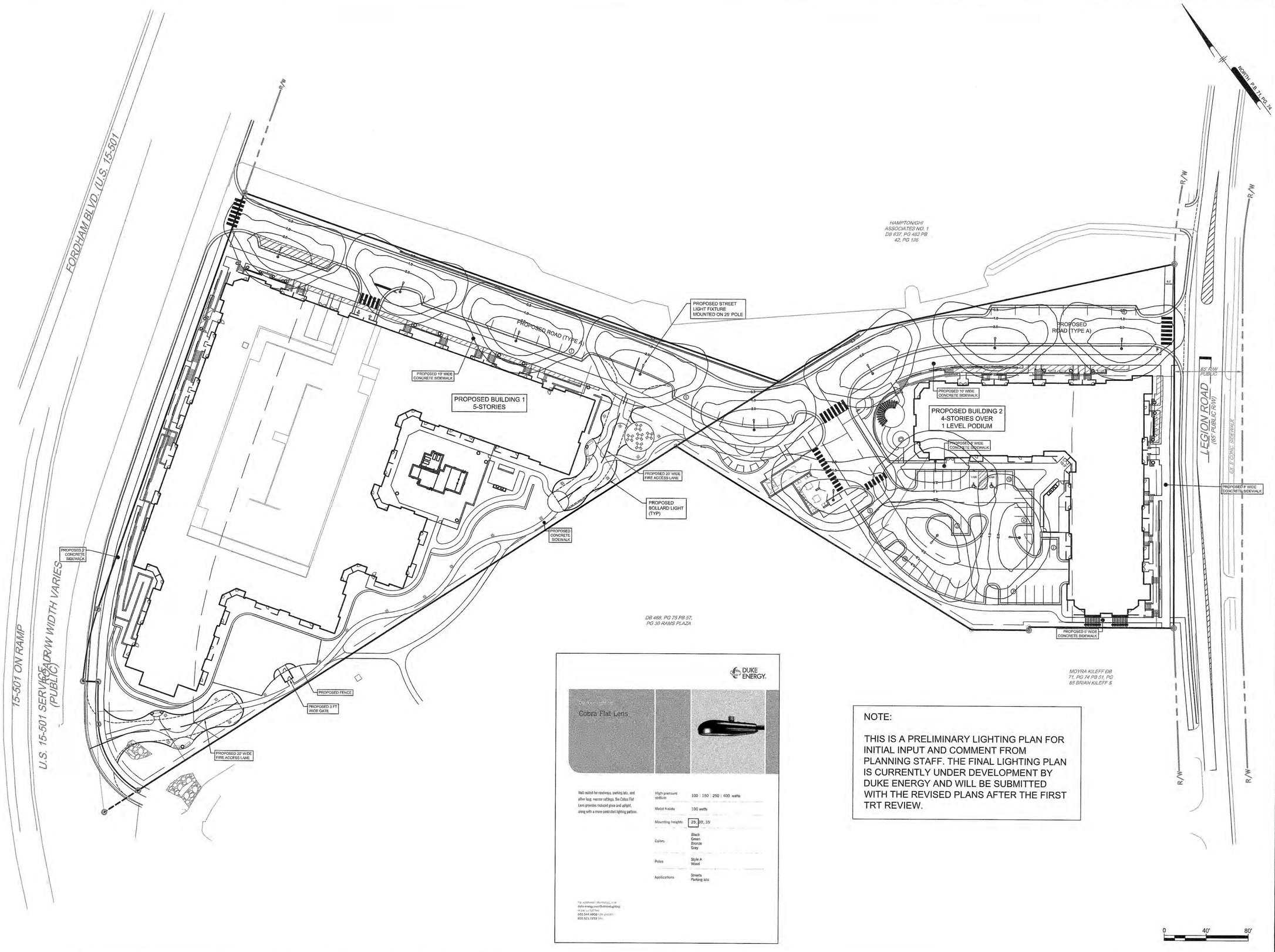

NOTE:

THIS IS A PRELIMINARY LIGHTING PLAN FOR INITIAL INPUT AND COMMENT FROM PLANNING STAFF. THE FINAL LIGHTING PLAN IS CURRENTLY UNDER DEVELOPMENT BY DUKE ENERGY AND WILL BE SUBMITTED WITH THE REVISED PLANS AFTER THE FIRST TRT REVIEW.

PHILIP POST & ASSOCIATES
A Division of Pennoni Firm License F-1267
PENNONI ASSOCIATES INC.
401 Providence Road #200
Chapel Hill, NC 27514
T 919.929.1173 F 919.493.6548

ALL DIMENSIONS MUST BE VERIFIED BY CONTRACTOR AND OWNER MUST BE NOTIFIED OF ANY DISCREPANCIES BEFORE PROCEEDING WITH WORK

NORTH CAROLINA PROFESSIONAL SEAL 030517 ENGINEER TIMOTHY A. SMITH 12-8-16

HILLSTONE CHAPEL HILL

1730 FORDHAM BLVD.
CHAPEL HILL, NORTH CAROLINA 27514

LIGHTING PLAN

LEON CAPITAL GROUP
5970 FAIRVIEW ROAD, SUITE 450
CHARLOTTE, NORTH CAROLINA 28210

NO.	DATE	REVISIONS	BY

ALL DOCUMENTS PREPARED BY PENNONI ASSOCIATES ARE INSTRUMENTS OF SERVICE IN RESPECT OF THE PROJECT. THEY ARE NOT INTENDED OR REPRESENTED TO BE SUITABLE FOR REUSE BY OWNER OR OTHERS ON THE EXTENSIONS OF THE PROJECT OR ON ANY OTHER PROJECT. ANY REUSE WITHOUT WRITTEN VERIFICATION OR ADAPTATION BY PENNONI ASSOCIATES FOR THE SPECIFIC PURPOSE INTENDED WILL BE AT OWNERS SOLE RISK AND WITHOUT LIABILITY OR LEGAL EXPOSURE TO PENNONI ASSOCIATE. AND OWNER SHALL INDEMNIFY AND HOLD HARMLESS PENNONI ASSOCIATES FROM ALL CLAIMS, DAMAGES, LOSSES AND EXPENSES ARISING OUT OF OR RESULTING THEREFROM.

PROJECT	LCGR1602
DATE	DECEMBER 7, 2016
DRAWING SCALE	1" = 30'
DRAWN BY	WRA
APPROVED BY	TAS

CS2201

SHEET 13 OF 21

P:\Projects\LCGR\CAMLCGR1602-Apartment Site\DESIGN_PUBLISH\CS2201.dwg PLOTTED: 12/6/2016 3:00 PM, BY: William Akin PLOTSTYLE: Pennoni NCS.ctb PROJECT STATUS: DESIGN DEVELOPMENT

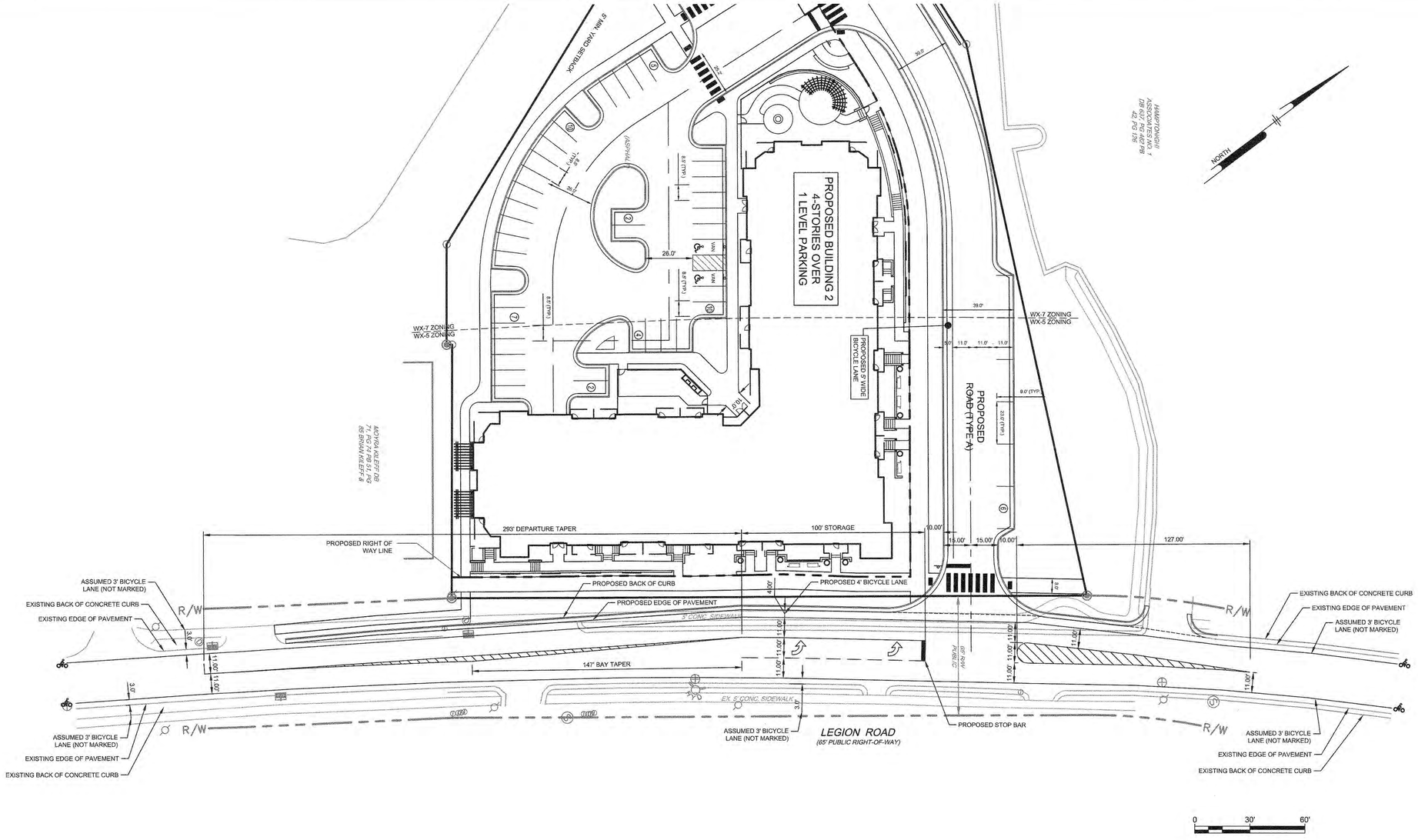

NOT FOR CONSTRUCTION

PHILIP POST & ASSOCIATES

A Division of Pennoni Firm License F-1267

PENNONI ASSOCIATES INC.
401 Providence Road #200
Chapel Hill, NC 27514
T 919.929.1173 F 919.493.6548

ALL DIMENSIONS MUST BE VERIFIED BY CONTRACTOR AND OWNER MUST BE NOTIFIED OF ANY DISCREPANCIES BEFORE PROCEEDING WITH WORK

NORTH CAROLINA PROFESSIONAL SEAL 030517 ENGINEER TIMOTHY A. SMITH 12-8-16

HILLSTONE CHAPEL HILL
1730 FORDHAM BLVD.
CHAPEL HILL, NORTH CAROLINA 27514

LEGION ROAD WIDENING PLAN

LEON CAPITAL GROUP
5970 FAIRVIEW ROAD, SUITE 450
CHARLOTTE, NORTH CAROLINA 28210

DATE	NO.	REVISIONS	BY

ALL DOCUMENTS PREPARED BY PENNONI ASSOCIATES ARE INSTRUMENTS OF SERVICE IN RESPECT OF THE PROJECT. THEY ARE NOT INTENDED OR REPRESENTED TO BE SUITABLE FOR REUSE BY OWNER OR OTHERS ON THE EXTENSIONS OF THE PROJECT OR ON ANY OTHER PROJECT. ANY REUSE WITHOUT WRITTEN VERIFICATION OR ADAPTATION BY PENNONI ASSOCIATES FOR THE SPECIFIC PURPOSE INTENDED WILL BE AT OWNERS SOLE RISK AND WITHOUT LIABILITY OR LEGAL EXPOSURE TO PENNONI ASSOCIATES; AND OWNER SHALL INDEMNIFY AND HOLD HARMLESS PENNONI ASSOCIATES FROM ALL CLAIMS, DAMAGES, LOSSES AND EXPENSES ARISING OUT OF OR RESULTING THEREFROM.

PROJECT	LCGR1602
DATE	DECEMBER 7, 2016
DRAWING SCALE	1" = 30'
DRAWN BY	WRA
APPROVED BY	TAS

CS2701

SHEET 14 OF 21

P:\Projects\LCGR\CONALCGR1602-Apartment Site\DESIGN_PUBLISH\CS2701.dwg PLOTTED: 12/8/2016 4:03 PM, BY: Blake Fitzgerald PLOTSTYLE: Pennoni NCS.ctb PROJECT STATUS: DESIGN DEVELOPMENT

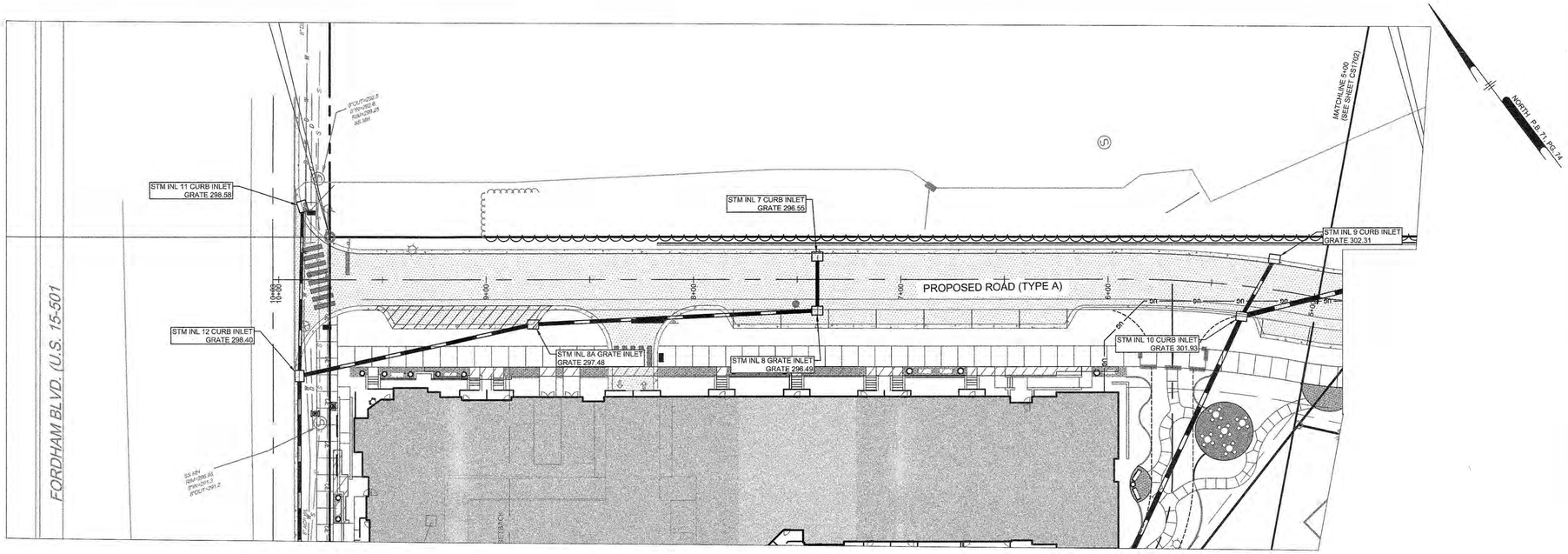

SCALE: 1" = 30'

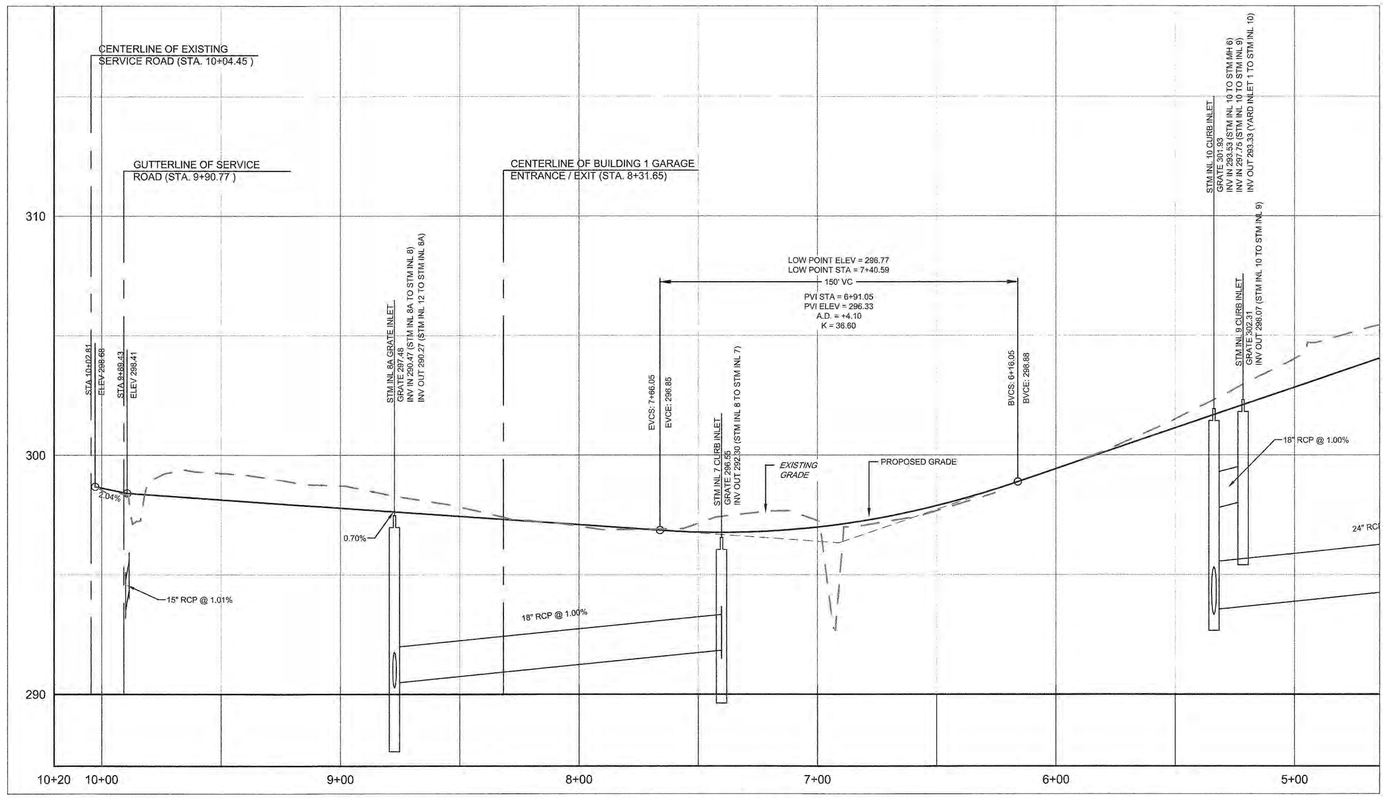

SCALE: HORIZONTAL 1" = 30'
VERTICAL 1" = 3'

0 30' 60'

PHILIP POST & ASSOCIATES
A Division of Pennoni Firm License F-1287
PENNONI ASSOCIATES INC.
401 Providence Road #200
Chapel Hill, NC 27514
T 919.929.1173 F 919.493.6548

ALL DIMENSIONS MUST BE VERIFIED BY CONTRACTOR AND OWNER MUST BE NOTIFIED OF ANY DISCREPANCIES BEFORE PROCEEDING WITH WORK

NORTH CAROLINA PROFESSIONAL SEAL 030517 ENGINEER TIMOTHY A. SMITH 12-7-16

HILLSTONE CHAPEL HILL

1730 FORDHAM BLVD.
CHAPEL HILL, NORTH CAROLINA 27514

PROPOSED ROAD PLAN AND PROFILE

LEON CAPITAL GROUP
5970 FAIRVIEW ROAD, SUITE 450
CHARLOTTE, NORTH CAROLINA 28210

NO.	DATE	REVISIONS	BY
#	#	#	#
#	#	#	#
#	#	#	#
#	#	#	#
#	#	#	#
#	#	#	#

ALL DOCUMENTS PREPARED BY PENNONI ASSOCIATES ARE INSTRUMENTS OF SERVICE IN RESPECT OF THE PROJECT. THEY ARE NOT INTENDED OR REPRESENTED TO BE SUITABLE FOR REUSE BY OWNER OR OTHERS ON THE EXTENSIONS OF THE PROJECT OR ON ANY OTHER PROJECT. ANY REUSE WITHOUT WRITTEN VERIFICATION OR ADAPTATION BY PENNONI ASSOCIATES FOR THE SPECIFIC PURPOSE INTENDED WILL BE AT OWNERS SOLE RISK AND WITHOUT LIABILITY OR LEGAL EXPOSURE TO PENNONI ASSOCIATE; AND OWNER SHALL INDEMNIFY AND HOLD HARMLESS PENNONI ASSOCIATES FROM ALL CLAIMS, DAMAGES, LOSSES AND EXPENSES ARISING OUT OF OR RESULTING THEREFROM.

PROJECT	LCGR1602
DATE	DECEMBER 7, 2016
DRAWING SCALE	1" = 30'
DRAWN BY	WRA
APPROVED BY	TAS

CS3501

SHEET 15 OF 21

P:\Projects\LCGROUP\LCGR1602-Apartment Site\DESIGN_PUBLISH\CS3501.dwg PLOTTED: 12/8/2016 3:42 AM, BY: William Allo PLOTSTYLE: Pennoni.NCS.ctb PROJECT STATUS: DESIGN DEVELOPMENT

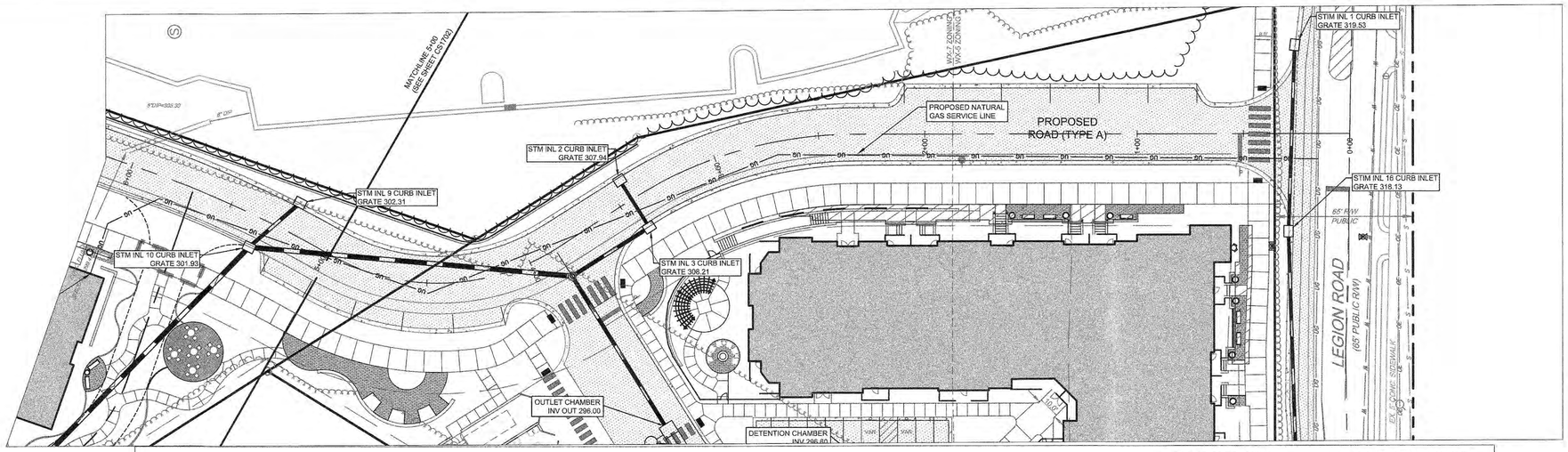

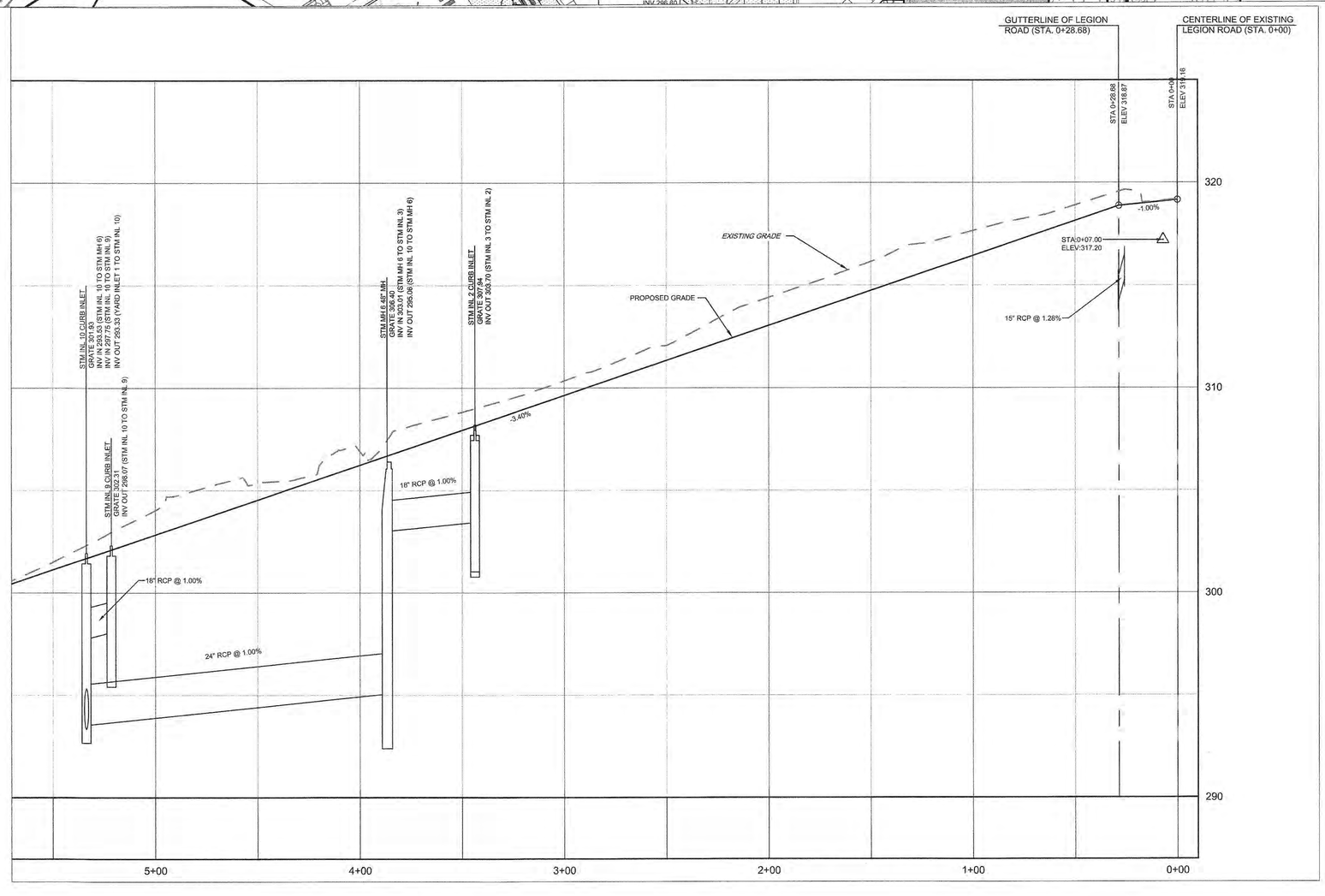

0 30' 60'

PHILIP POST & ASSOCIATES
A Division of Pennoni Firm License F-1297
PENNONI ASSOCIATES INC.
401 Providence Road #200
Chapel Hill, NC 27514
T 919.929.1173 F 919.493.6548

ALL DIMENSIONS MUST BE VERIFIED BY CONTRACTOR AND OWNER MUST BE NOTIFIED OF ANY DISCREPANCIES BEFORE PROCEEDING WITH WORK

NORTH CAROLINA PROFESSIONAL SEAL 030517 ENGINEER TIMOTHY A. SMITH
12-8-16

HILLSTONE CHAPEL HILL

1730 FORDHAM BLVD.
CHAPEL HILL, NORTH CAROLINA 27514

PROPOSED ROAD PLAN AND PROFILE - 2

LEON CAPITAL GROUP
5970 FAIRVIEW ROAD, SUITE 450
CHARLOTTE, NORTH CAROLINA 28210

NO.	DATE	REVISIONS	BY

ALL DOCUMENTS PREPARED BY PENNONI ASSOCIATES ARE INSTRUMENTS OF SERVICE IN RESPECT OF THE PROJECT. THEY ARE NOT INTENDED OR REPRESENTED TO BE SUITABLE FOR REUSE BY OWNER OR OTHERS ON THE EXTENSIONS OF THE PROJECT OR ON ANY OTHER PROJECT. ANY REUSE WITHOUT WRITTEN VERIFICATION OR ADAPTATION BY PENNONI ASSOCIATES FOR THE SPECIFIC PURPOSE INTENDED WILL BE AT OWNERS SOLE RISK AND WITHOUT LIABILITY OR LEGAL EXPOSURE TO PENNONI ASSOCIATE; AND OWNER SHALL INDEMNIFY AND HOLD HARMLESS PENNONI ASSOCIATES FROM ALL CLAIMS, DAMAGES, LOSSES AND EXPENSES ARISING OUT OF OR RESULTING THEREFROM.

PROJECT	LCGR1602
DATE	DECEMBER 7, 2016
DRAWING SCALE	1" = 30'
DRAWN BY	WRA
APPROVED BY	TAS

CS3502

SHEET 16 OF 21

P:\Projects\LCGR\CMN\LCGR1602-Apartments Site\DESIGN_PUBLISH\CS3502.dwg PLOTTED: 12/6/2016 3:46 AM, BY: William Akin PLOTSTYLE: Pennoni NCS.ctb PROJECT STATUS: DESIGN DEVELOPMENT

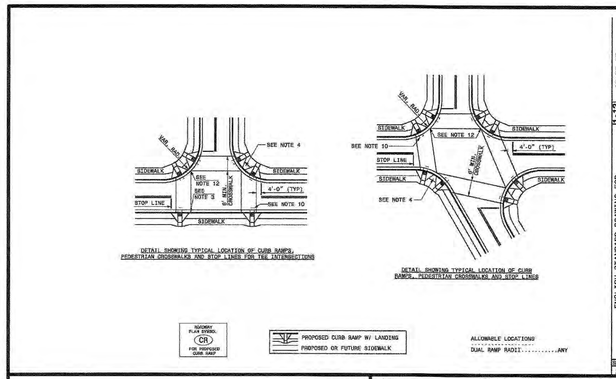

ENGINEERING DEPARTMENT STANDARD DETAILS

STATE OF NORTH CAROLINA DEPT. OF TRANSPORTATION DIVISION OF HIGHWAYS RALEIGH, N.C.

I-12

ENGLISH STANDARD DRAWING FOR CURB RAMP PROPOSED CURB AND GUTTER

SHEET 1 OF 3 848.05

TITLE:	REVISIONS		DET.NO.
ACCESSIBLE RAMP	09/03 02/08	JH ER	ST - 5.3

NOTE: DRAWING NOT TO SCALE
SOURCE: NCDOT STANDARD DRAWINGS

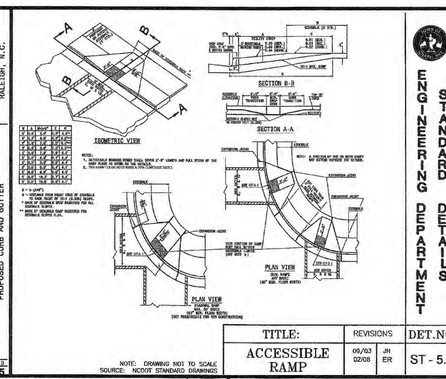

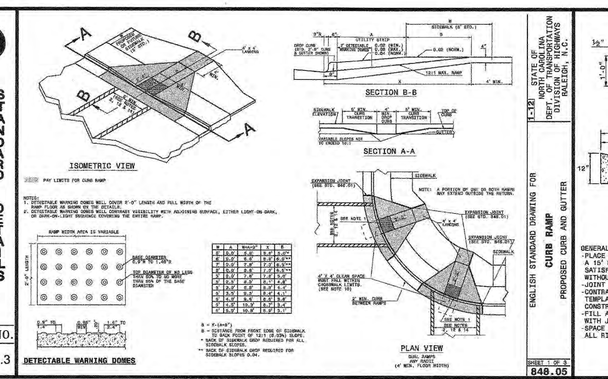

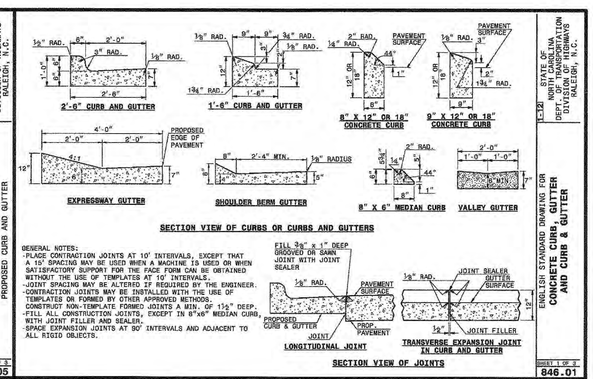

STATE OF NORTH CAROLINA DEPT. OF TRANSPORTATION DIVISION OF HIGHWAYS RALEIGH, N.C.

I-12

ENGLISH STANDARD DRAWING FOR CONCRETE CURB, GUTTER AND CURB & GUTTER

SHEET 1 OF 2 846.01

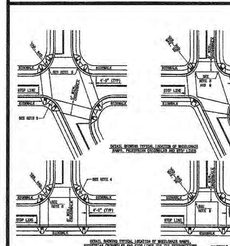

TITLE:	REVISIONS		DET.NO.
ACCESSIBLE RAMP	09/03	JH	ST - 5.2

NOTE: DRAWING NOT TO SCALE
SOURCE: NCDOT STANDARD DRAWINGS

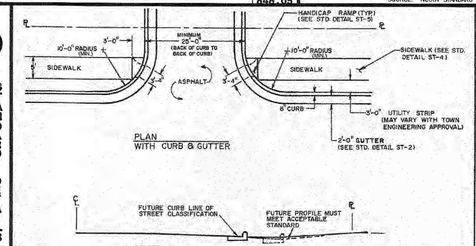

NOTES:
1. FOR COMMERCIAL & MULTI-FAMILY USES ONLY.
2. DRIVES TO BE GRADED TO DRAIN TOWARD STREET FROM PROPERTY LINE & AWAY FROM STREET FROM PROPERTY LINE UNLESS STORM DRAINAGE STRUCTURES ARE PROVIDED TO INTERCEPT STORM FLOWS.
3. DRIVE GRADE PROFILE SHALL BE DESIGNED TO TIE IN WITH ULTIMATE WIDENING OF STREET.

NO SCALE

ENGINEERING DEPARTMENT STANDARD DETAILS

TITLE	REVISIONS			DET.NO
DRIVEWAY-STREET TYPE, CURB & GUTTER SECTION	NO	DATE	BY	D-3

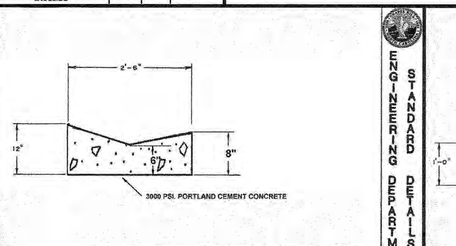

ENGINEERING DEPARTMENT STANDARD DETAILS

TITLE	REVISIONS			DET.NO
VALLEY CURB AND GUTTER SECTION	NO	DATE	BY	ST-2C

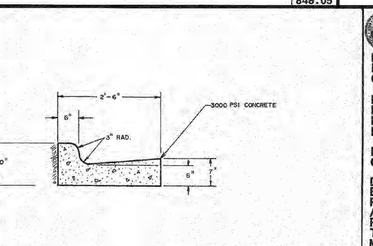

SCALE: 1"=1'-0"

ENGINEERING DEPARTMENT STANDARD DETAILS

TITLE	REVISIONS			DET.NO
CURB & GUTTER SECTION	NO	DATE	BY	ST-2

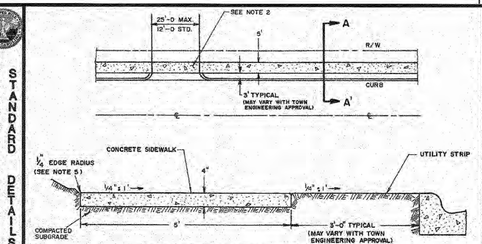

NOTES:
1. ALL CONCRETE 3000 PSI.
2. SEE STANDARD DETAIL "D-1" FOR THROUGH DRIVEWAY SPECIFICATIONS.
3. EXPANSION JOINTS SO'APART MAXIMUM.
4. CONTROL JOINT EVERY 5 FEET.
5. ALL SIDEWALKS SHALL BE CONSTRUCTED WITH TOOLED ½" EDGE RADIUS.
6. IF UTILITY STRIP IS COMPLETELY ELIMINATED, SIDEWALK SHALL BE PLACED DIRECTLY AT BACK-OF-CURB, WITH ½" EDGE RADIUS.

ENGINEERING DEPARTMENT STANDARD DETAILS

TITLE	REVISIONS			DET.NO
TYPICAL SIDEWALK	NO	DATE	BY	ST-4

NOTES:

1. CONSTRUCT THE WALKING SURFACE WITH SLIP RESISTANCE AND A 70% CONTRASTING COLOR TO THE SIDEWALK.
2. CROSSWALK WIDTHS AND CONFIGURATION MAY VARY BUT MUST CONFORM TO TRAFFIC DESIGN STANDARDS.
3. PROVIDE WHEELCHAIR RAMPS AT LOCATIONS AS SHOWN ON THE PLANS OR AS DIRECTED BY THE ENGINEER. LOCATE WHEELCHAIR RAMPS AS DIRECTED BY THE ENGINEER WHERE EXISTING LIGHT POLES, FIRE HYDRANTS, DROP INLETS, ETC. AFFECT PLACEMENT. WHERE TWO RAMPS ARE INSTALLED, PLACE NOT LESS THAN TWO FEET OF FULL HEIGHT CURB BETWEEN THE RAMPS. PLACE DUAL RAMPS AS PERPENDICULAR TO THE TRAVEL LANE BEING CROSSED AS POSSIBLE .
4. DO NOT EXCEED 0.08 (12:1) SLOPE ON THE WHEELCHAIR RAMP IN RELATIONSHIP TO THE GRADE OF THE STREET.
5. CONSTRUCT WHEELCHAIR RAMPS 40" (3'-4") OR GREATER FOR DUAL RAMPS AND 60" (5'-0") OR GREATER FOR DIAGONAL RAMPS.
6. USE CONCRETE WITH A SIDEWALK FINISH IN ORDER TO OBTAIN A ROUGH NON-SKID TYPE SURFACE.
7. PLACE A 1/2" EXPANSION JOINT WHERE THE CONCRETE WHEELCHAIR RAMP JOINS THE CURB AS SHOWN ON DETAIL ST-5A.
8. PLACE THE INSIDE PEDESTRIAN CROSSWALK LINES NO CLOSER IN THE INTERSECTION (BY BISECTING THE INTERSECTION RADII, WITH ALLOWANCE OF A 4' CLEAR ZONE IN THE VEHICULAR TRAVELWAY WHEN ONE RAMP IS REQUIRED. (SEE NOTE 13)
9. COORDINATE THE CURB CUT AND THE PEDESTRIAN CROSSWALK LINES SO THE FLOOR OF THE WHEELCHAIR RAMP WILL FALL WITHIN THE PEDESTRIAN CROSSWALK LINES. PLACE DIAGONAL RAMPS WITH FLARED SIDES SO 24" OF FULL HEIGHT CURB FALLS WITHIN THE CROSSWALK MARKINGS ON EACH SIDE OF THE FLARES.
10. CONSTRUCT THE PEDESTRIAN CROSSWALK A MINIMUM OF 6 FEET. A CROSSWALK WIDTH OF 8 FEET OR GREATER IS DESIRABLE.
11. USE STOP LINES, NORMALLY PERPENDICULAR TO THE LANE LINES, WHERE IT IS IMPORTANT TO INDICATE THE POINT BEHIND WHICH VEHICLES ARE REQUIRED TO STOP IN COMPLIANCE WITH A TRAFFIC SIGNAL, STOP SIGN OR OTHER LEGAL REQUIREMENT. AN UNUSUAL APPROACH SKEW MAY REQUIRE THE PLACEMENT OF THE STOP LINE TO BE PARALLEL TO THE INTERSECTION ROADWAY.
12. TERMINATE PARKING A MINIMUM OF 20 FEET BACK OF PEDESTRIAN CROSSWALK.
13. PLACE ALL PAVEMENT MARKINGS IN ACCORDANCE WITH THE LATEST EDITION OF THE MANUAL OF UNIFORM TRAFFIC CONTROL DEVICES (MUTCD) PUBLISHED BY THE FEDERAL HIGHWAY ADMINISTRATION AND THE NORTH CAROLINA SUPPLEMENT TO THE MUTCD.

TITLE:	REVISIONS		DET.NO.
ACCESSIBLE RAMP	09/03	JH	ST - 5.4

SOURCE: NCDOT STANDARD DRAWINGS

ENGINEERING DEPARTMENT STANDARD DETAILS

STATE OF NORTH CAROLINA DEPT. OF TRANSPORTATION DIVISION OF HIGHWAYS RALEIGH, N.C.

I-12

ENGLISH STANDARD DRAWING FOR CURB RAMPS NOTES

SHEET 2 OF 3 848.05

NOTES:

1. CONSTRUCT THE RAMP SURFACE TO BE STABLE, FIRM, AND SLIP RESISTANT. CONSTRUCT THE CURB RAMP TYPE AS SHOWN IN THE PAVEMENT MARKING PLANS OR AS DIRECTED BY THE ENGINEER.
2. LOCATE CURB RAMPS AND PLACE PEDESTRIAN CROSSWALK MARKINGS AS SHOWN IN THE PAVEMENT MARKING PLANS. WHEN FIELD ADJUSTMENTS REQUIRE MOVING CURB RAMPS OR MARKINGS AS SHOWN, CONTACT THE SIGNING AND DELINEATION UNIT OR LOCATE AS DIRECTED BY THE ENGINEER.
3. COORDINATE THE CURB RAMP AND THE PEDESTRIAN CROSSWALK MARKINGS SO A 4'x4' CLEAR SPACE AT THE BASE OF THE CURB RAMP WILL FALL WITHIN THE PEDESTRIAN CROSSWALK LINES.
4. SET BACK DISTANCE FROM INSIDE CROSSWALK MARKING TO NEAREST EDGE OF TRAVEL LANE IS 4' MINIMUM.
5. REFER TO THE PAVEMENT MARKING PLANS FOR STOP BAR LOCATIONS AT SIGNALIZED INTERSECTIONS. IF A PAVEMENT MARKING PLAN IS NOT PROVIDED, CONTACT THE SIGNAL DESIGN SECTION FOR THE STOP BAR LOCATIONS OR LOCATE AS DIRECTED BY THE ENGINEER.
6. TERMINATE PARKING A MINIMUM OF 20' BACK OF A PEDESTRIAN CROSSWALK.
7. CONSTRUCT CURB RAMPS A MINIMUM OF 4' WIDE.
8. CONSTRUCT THE RUNNING SLOPE OF THE RAMP 8.33% MAXIMUM.
9. ALLOWABLE CROSS SLOPE ON SIDEWALKS AND CURB RAMPS WILL BE 2% MAXIMUM.
10. CONSTRUCT THE SIDE FLARE SLOPE A MAXIMUM OF 10% MEASURED ALONG THE CURB LINE.
11. CONSTRUCT THE COUNTER SLOPE OF THE GUTTER OR STREET AT THE BASE OF THE CURB RAMP A MAXIMUM OF 5% AND MAINTAIN A SMOOTH TRANSITION.
12. CONSTRUCT LANDINGS FOR SIDEWALK A MINIMUM OF 4'x4' WITH A MAXIMUM SLOPE OF 2% IN ANY DIRECTION. CONSTRUCT LANDINGS FOR MEDIAN ISLANDS A MINIMUM OF 6'x4' WITH A MAXIMUM SLOPE OF 2% IN ANY DIRECTION.
13. TO USE A MEDIAN ISLAND AS A PEDESTRIAN REFUGE AREA, MEDIAN ISLANDS WILL BE A MINIMUM OF 6' WIDE. CONSTRUCT MEDIAN ISLANDS TO PROVIDE PASSAGE OVER OR THROUGH THE ISLAND.
14. SMALL CHANNELIZATION ISLANDS THAT CAN NOT PROVIDE A 5'X5' LANDING AT THE TOP OF A RAMPS, WILL BE CUT THROUGH LEVEL WITH THE SURFACE STREET.
15. CURB RAMPS WITH RETURNED CURBS MAY BE USED ONLY WHERE PEDESTRIANS WOULD NOT NORMALLY WALK ACROSS THE RAMP. THE ADJACENT SURFACE IS PLANTING OR OTHER NON-WALKING SURFACE ON THE SIDE APPROACH IS SUBSTANTIALLY OBSTRUCTED.
16. PLACE A ½" EXPANSION JOINT WHERE THE CONCRETE CURB RAMP JOINS THE CURB AS SHOWN IN ROADWAY STANDARD DRAWING 848.01
17. PLACE ALL PEDESTRIAN PUSH BUTTON ACTUATORS AND CROSSING SIGNALS AS SHOWN IN THE PLANS OR AS SHOWN IN THE MUTCD.
18. CURB RAMPS THROUGH MEDIAN ISLANDS, SINGLE RAMPS AT DUAL CROSSWALKS OR LIMITED R/W SITUATIONS, WILL BE HANDLED BY SPECIAL DETAILS. CONTACT THE CONTRACT STANDARDS AND DEVELOPMENT UNIT FOR THE DETAILS OR FOR A SPECIAL DESIGN.

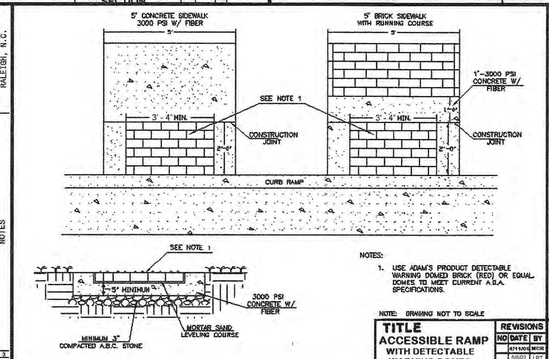

NOTES:
1. USE ADAM'S PRODUCT DETECTABLE WARNING DOMED BRICK (RED) OR EQUAL DOMES TO MEET CURRENT A.D.A. SPECIFICATIONS.

NOTE: DRAWING NOT TO SCALE

ENGINEERING DEPARTMENT STANDARD DETAILS

TITLE	REVISIONS			DET.NO
ACCESSIBLE RAMP WITH DETECTABLE WARNING DOMES	NO	DATE	BY	ST-5.1
		04/00	LRT	

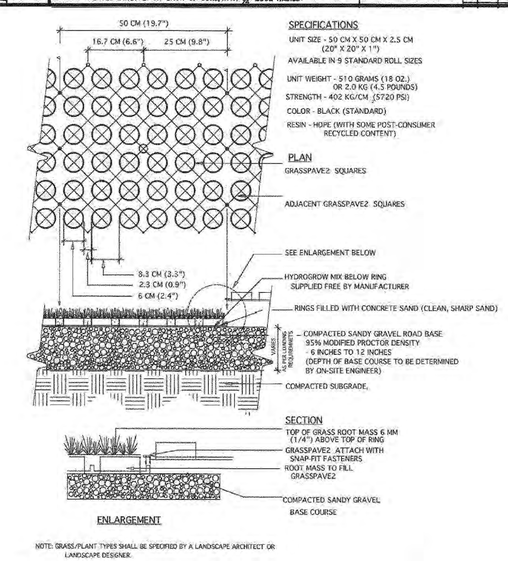

NOTE: GRASS/PLANT TYPES SHALL BE SPECIFIED BY A LANDSCAPE ARCHITECT OR LANDSCAPE DESIGNER.

TYPICAL GRASSPAVE2 DETAIL

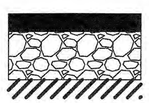

TYPICAL PAVING SECTION

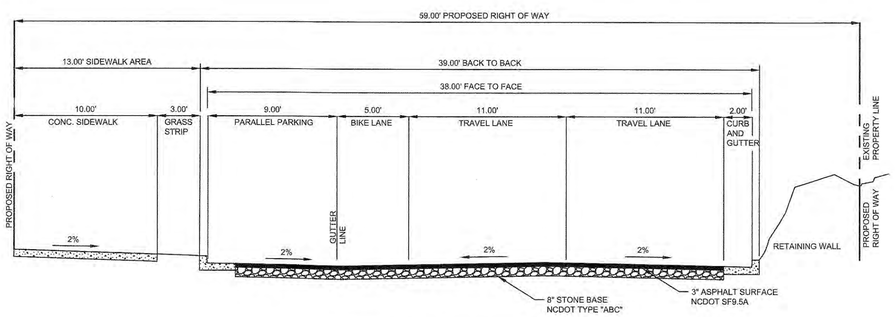

TYPICAL SECTION WITH PARALLEL PARKING
1" = 5'

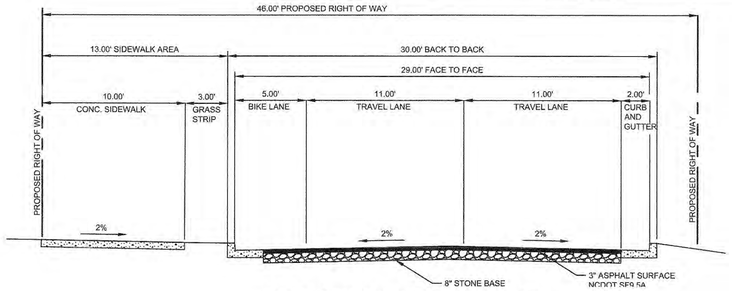

TYPICAL SECTION WITHOUT PARALLEL PARKING
1" = 5'

PHILIP POST & ASSOCIATES
A Division of Pennoni Firm License F-1267
PENNONI ASSOCIATES INC.
401 Providence Road #200
Chapel Hill, NC 27514
T 919.929.1173 F 919.493.6548

ALL DIMENSIONS MUST BE VERIFIED BY CONTRACTOR PRIOR TO CONSTRUCTION. ANY DISCREPANCIES BEFORE PROCEEDING WITH WORK

NORTH CAROLINA PROFESSIONAL SEAL 030517 ENGINEER TIMOTHY A. SMITH 12-8-16

HILLSTONE CHAPEL HILL
1730 FORDHAM BLVD.
CHAPEL HILL, NORTH CAROLINA 27514

SITE DETAILS

LEON CAPITAL GROUP
5970 FAIRVIEW ROAD, SUITE 450
CHARLOTTE, NORTH CAROLINA 28210

NO.	DATE	REVISIONS	BY

ALL DOCUMENTS PREPARED BY PENNONI ASSOCIATES ARE INSTRUMENTS OF SERVICE IN RESPECT OF THE PROJECT. THEY ARE NOT INTENDED OR REPRESENTED TO BE SUITABLE FOR REUSE BY OWNER OR OTHERS ON THE EXTENSIONS OF THE PROJECT OR ON ANY OTHER PROJECT. ANY REUSE WITHOUT WRITTEN VERIFICATION OR ADAPTATION BY PENNONI ASSOCIATES FOR THE SPECIFIC PURPOSE INTENDED WILL BE AT OWNERS SOLE RISK AND WITHOUT LIABILITY OR LEGAL EXPOSURE TO PENNONI ASSOCIATES; AND OWNER SHALL INDEMNIFY AND HOLD HARMLESS PENNONI ASSOCIATES FROM ALL CLAIMS, DAMAGES, LOSSES AND EXPENSES ARISING OUT OF OR RESULTING THEREFROM.

PROJECT	LCGR1602
DATE	DECEMBER 7, 2016
DRAWING SCALE	1" = 30'
DRAWN BY	WRA
APPROVED BY	TAS

CS6001

P:\Projects\LCGRCOM\LCGR1602\Apartment Site\DESIGN_PUBLISH\CS6001.dwg PLOTTED: 12/8/2016 1:40 PM, BY: William Akin PLOTSTYLE: Pennoni.MCS.stb PROJECT STATUS: DESIGN DEVELOPMENT

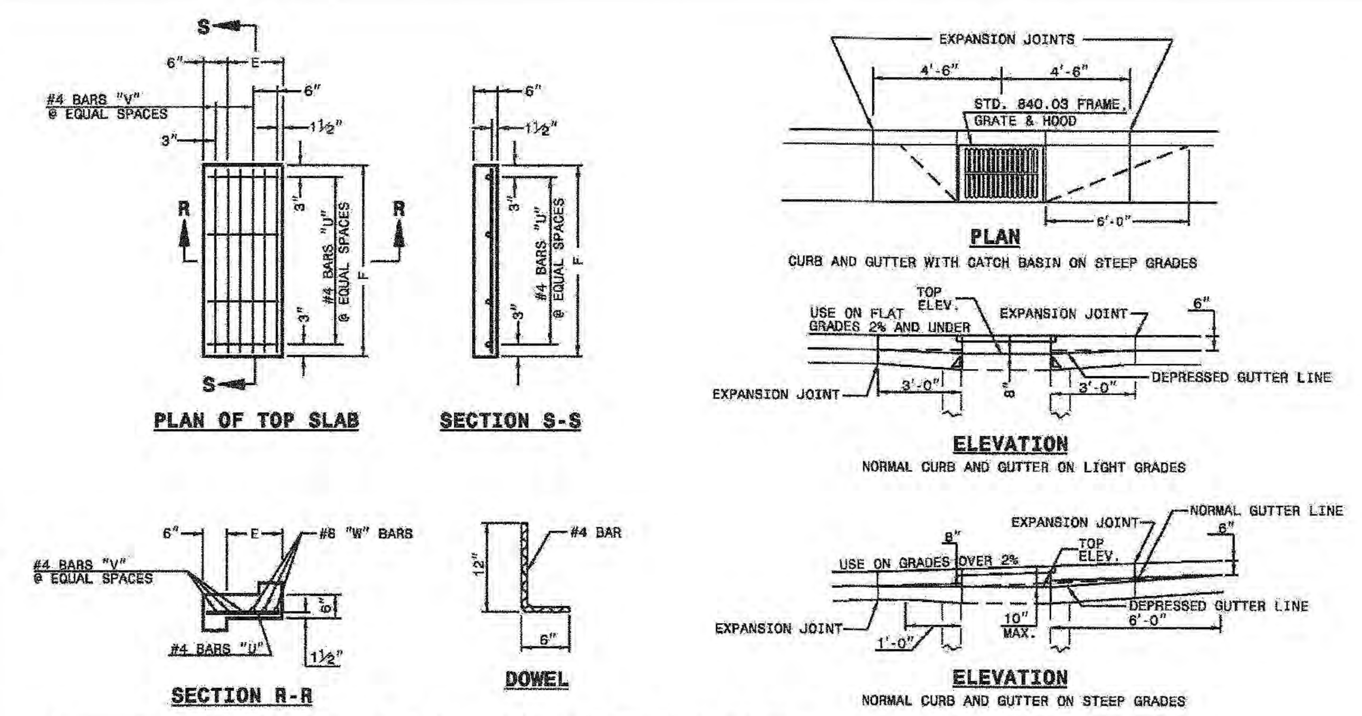

MINIMUM DIMENSIONS AND QUANTITIES FOR CONCRETE CATCH BASIN (BASED ON MIN. HEIGHT, H, WITH NO RISER) *

DIMENSIONS OF BOX AND PIPE						COVER DIMENSION									CU.YDS. CONC. IN BOX			DEDUCTIONS ONE PIPE	
PIPE	SPAN	WIDTH	WIDTH	SPAN	MIN. HEIGHT			BARS-U		BARS-V		BARS-W		TOTAL LBS.	TOP SLAB	BOTTOM SLAB	TOT. CONC. FOR MINIMUM HEIGHT, H		
D	A	B	C	G	H	E	F	NO.	LENGTH	NO.	LENGTH	NO.	LENGTH					C.M.	R.C.
12"	3'-0"	2'-2"	--	--	2'-9"	--	--	--	--	--	--	--	--	--	--	0.235	0.772	0.015	0.026
15"	3'-0"	2'-2"			3'-0"											0.235	0.829	0.023	0.036
18"	3'-0"	2'-2"			3'-3"											0.235	0.887	0.033	0.049
24"	3'-0"	2'-2"			3'-9"											0.235	1.001	0.059	0.085
30"	3'-0"	2'-2"	3'-4"		4'-3"	1'-2"	4'-0"	4	1'-5"	2	3'-9"	3	3'-9"	39	0.123	0.321	1.433	0.092	0.127
36"	3'-0"	2'-2"	3'-10"		4'-9"	1'-8"	4'-0"	4	1'-11"	3	3'-9"	3	3'-9"	43	0.161	0.358	1.714	0.132	0.178
42"	3'-0"	2'-2"		4'-5"	5'-3"	1'-5"	3'-2"	4	1'-8"	2	2'-11"	3	2'-11"	32	0.112	0.318	1.738	0.160	0.243
48"	3'-0"	2'-2"		5'-0"	5'-9"	2'-0"	3'-2"	4	2'-3"	3	2'-11"	3	2'-11"	35	0.145	0.352	2.052	0.235	0.317
54"	3'-0"	2'-2"		5'-7"	6'-3"	2'-7"	3'-2"	4	2'-10"	5	2'-11"	3	2'-11"	41	0.180	0.386	2.387	0.297	0.401

* RISER HAS .228 CUBIC YARDS OF CONCRETE PER FOOT HEIGHT

1-12 STATE OF NORTH CAROLINA DEPT. OF TRANSPORTATION DIVISION OF HIGHWAYS RALEIGH, N.C.

ENGLISH STANDARD DRAWING FOR **CONCRETE CATCH BASIN** 12" THRU 54" PIPE

SHEET 2 OF 2 **840.02**

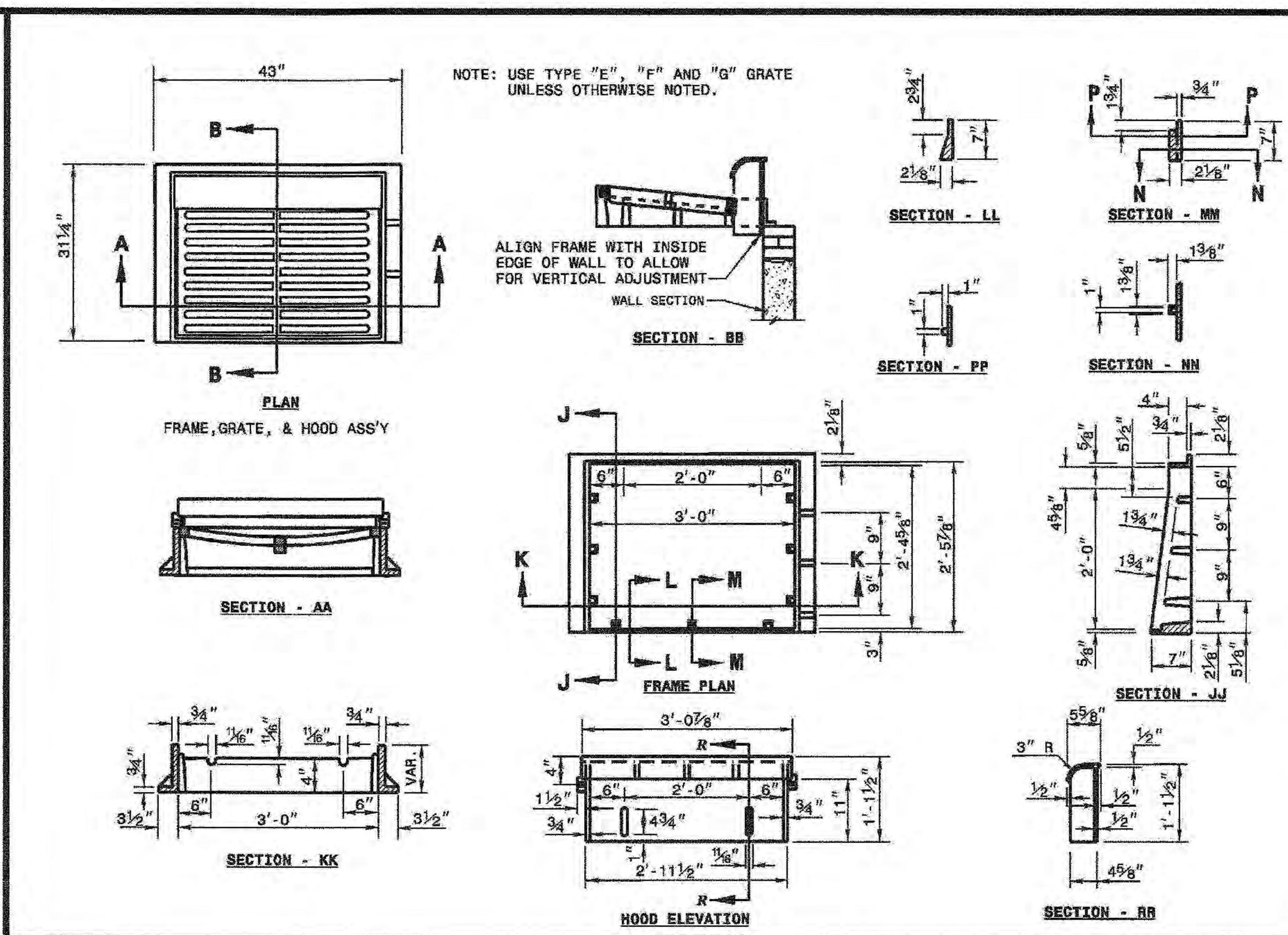

1-12 STATE OF NORTH CAROLINA DEPT. OF TRANSPORTATION DIVISION OF HIGHWAYS RALEIGH, N.C.

ENGLISH STANDARD DRAWING FOR **FRAME, GRATES, AND HOOD** FOR USE ON STANDARD CATCH BASIN

SHEET 1 OF 2 **840.03**

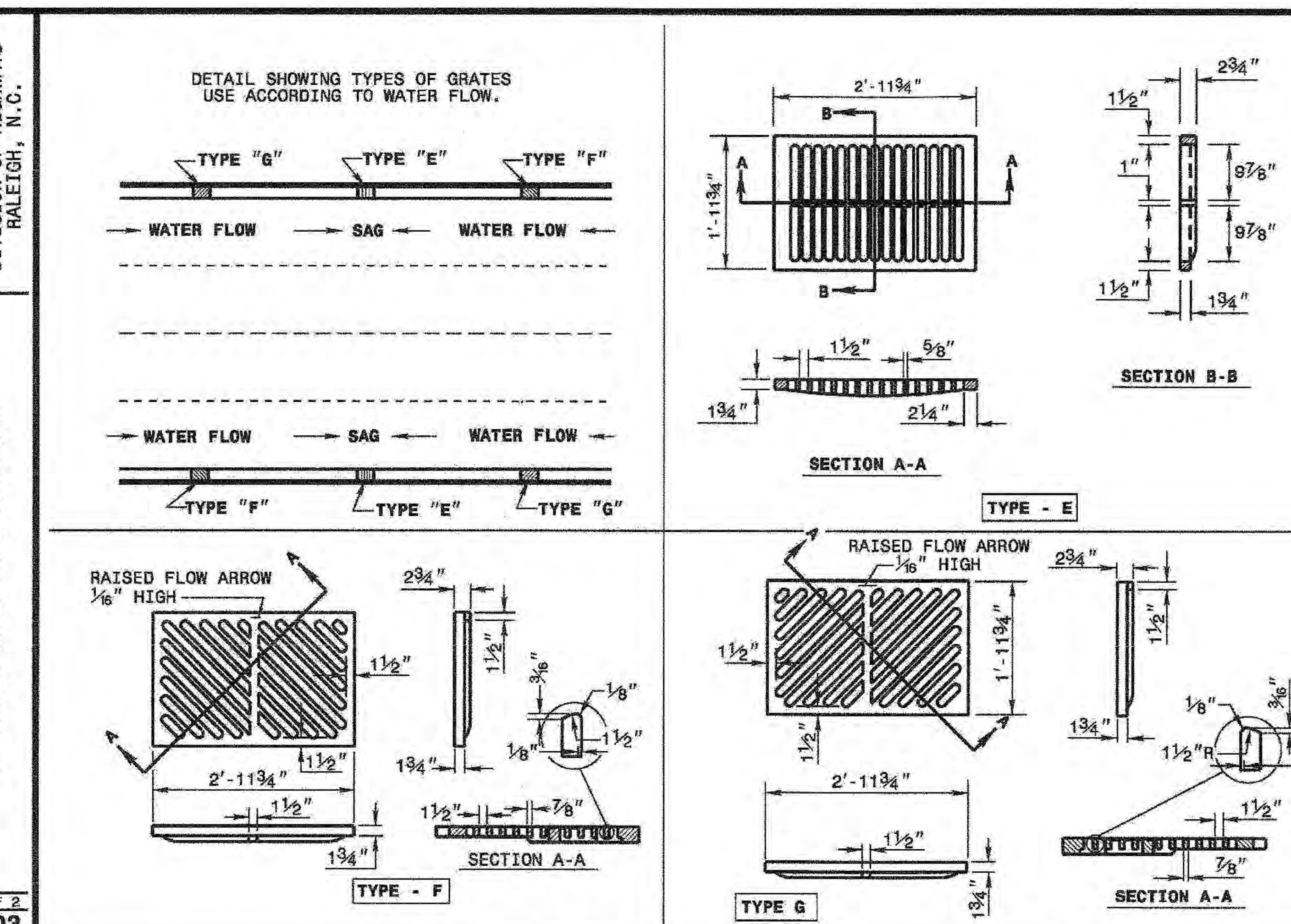

1-12 STATE OF NORTH CAROLINA DEPT. OF TRANSPORTATION DIVISION OF HIGHWAYS RALEIGH, N.C.

ENGLISH STANDARD DRAWING FOR **FRAME, GRATES, AND HOOD** FOR USE ON STANDARD CATCH BASIN

SHEET 2 OF 2 **840.03**

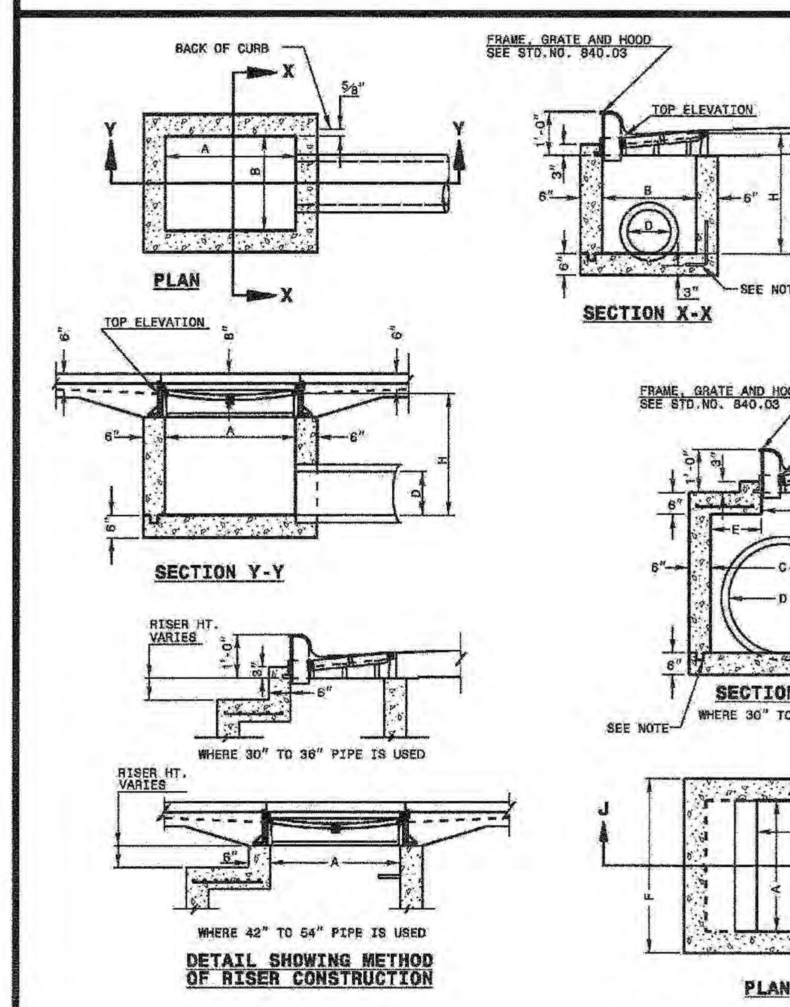

GENERAL NOTES:

USE CLASS "B" CONCRETE THROUGHOUT.

PROVIDE ALL CATCH BASINS OVER 3'-6" IN DEPTH WITH STEPS 12" ON CENTER. USE STEPS WHICH COMPLY WITH STD. DRAWING 840.66.

OPTIONAL CONSTRUCTION - MONOLITHIC POUR, 2" KEYWAY, OR #4 BAR DOWELS AT 12" CENTERS AS DIRECTED BY THE ENGINEER.

USE FORMS FOR THE CONSTRUCTION OF THE BOTTOM SLAB.

IF REINFORCED CONCRETE PIPE IS SET IN BOTTOM SLAB OF BOX, ADD TO SLAB AS SHOWN ON STD. NO. 840.00.

USE TYPE "E", "F" AND "G" GRATES UNLESS OTHERWISE INDICATED.

FOR 8'-0" IN HEIGHT OR LESS USE 6" WALLS AND BOTTOM SLAB. OVER 8'-0" TO 16'-0" IN HEIGHT USE 8" WALLS AND BOTTOM SLAB. ADJUST QUANTITIES ACCORDINGLY.

CONSTRUCT WITH PIPE CROWNS MATCHING.

CHAMFER ALL EXPOSED CORNERS 1".

DRAWING NOT TO SCALE.

1-12 STATE OF NORTH CAROLINA DEPT. OF TRANSPORTATION DIVISION OF HIGHWAYS RALEIGH, N.C.

ENGLISH STANDARD DRAWING FOR **CONCRETE CATCH BASIN** 12" THRU 54" PIPE

SHEET 1 OF 2 **840.02**

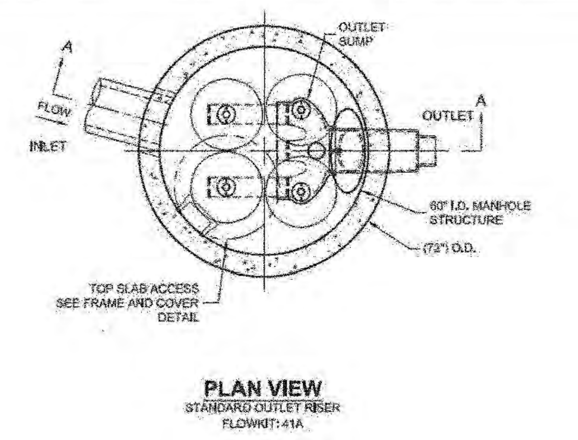

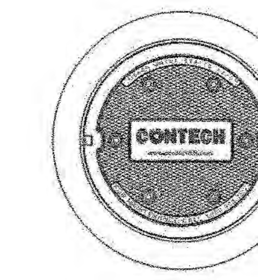

FRAME AND COVER
(DIAMETER VARIES)
N.T.S.

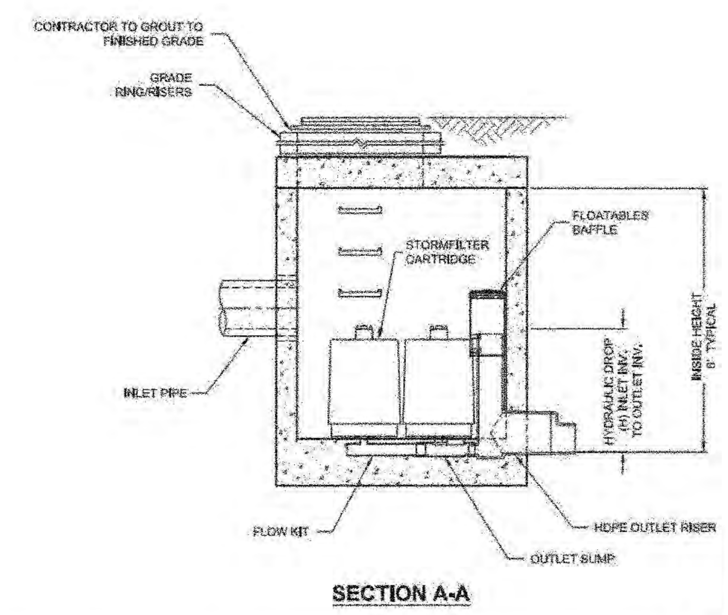

GENERAL NOTES
1. CONTECH TO PROVIDE ALL MATERIALS UNLESS NOTED OTHERWISE.
2. DIMENSIONS MARKED WITH ( ) ARE REFERENCE DIMENSIONS. ACTUAL DIMENSIONS MAY VARY.
3. FOR SITE SPECIFIC DRAWINGS WITH DETAILED VAULT DIMENSIONS AND WEIGHTS, PLEASE CONTACT YOUR CONTECH ENGINEERED SOLUTIONS LLC REPRESENTATIVE. www.ContechES.com
4. STORMFILTER WATER QUALITY STRUCTURE SHALL BE IN ACCORDANCE WITH ALL DESIGN DATA AND INFORMATION CONTAINED IN THIS DRAWING.
5. STRUCTURE SHALL MEET AASHTO HS-20 LOAD RATING, ASSUMING EARTH COVER OF 0' - 5' AND GROUNDWATER ELEVATION AT, OR BELOW, THE OUTLET PIPE INVERT ELEVATION. ENGINEER OF RECORD TO CONFIRM ACTUAL GROUNDWATER ELEVATION. CASTINGS SHALL MEET AASHTO M306 AND BE CAST WITH THE CONTECH LOGO.
6. FILTER CARTRIDGES SHALL BE MEDIA-FILLED, PASSIVE, SIPHON ACTUATED, RADIAL FLOW, AND SELF CLEANING. RADIAL MEDIA DEPTH SHALL BE 7-INCHES. FILTER MEDIA CONTACT TIME SHALL BE AT LEAST 38 SECONDS.
7. SPECIFIC FLOW RATE IS EQUAL TO THE FILTER TREATMENT CAPACITY (gpm) DIVIDED BY THE FILTER CONTACT SURFACE AREA (sq ft).
8. STORMFILTER STRUCTURE SHALL BE PRECAST CONCRETE CONFORMING TO ASTM C-478 AND AASHTO LOAD FACTOR DESIGN METHOD.

INSTALLATION NOTES
A. ANY SUB-BASE, BACKFILL DEPTH, AND/OR ANTI-FLOTATION PROVISIONS ARE SITE-SPECIFIC DESIGN CONSIDERATIONS AND SHALL BE SPECIFIED BY ENGINEER OF RECORD.
B. CONTRACTOR TO PROVIDE EQUIPMENT WITH SUFFICIENT LIFTING AND REACH CAPACITY TO LIFT AND SET THE STORMFILTER STRUCTURE (LIFTING CLUTCHES PROVIDED).
C. CONTRACTOR TO INSTALL JOINT SEALANT BETWEEN ALL STRUCTURE SECTIONS AND ASSEMBLE STRUCTURE.
D. CONTRACTOR TO PROVIDE, INSTALL, AND GROUT INLET PIPE(S).
E. CONTRACTOR TO PROVIDE AND INSTALL CONNECTOR TO THE OUTLET RISER STUB. STORMFILTER EQUIPPED WITH A DUAL DIAMETER HDPE OUTLET STUB AND SAND COLLAR. IF OUTLET PIPE IS LARGER THAN 8 INCHES, CONTRACTOR TO REMOVE THE 8 INCH OUTLET STUB AT MOLDED IN CUT LINE. COUPLING BY FERNCO OR EQUAL AND PROVIDED BY CONTRACTOR.
F. CONTRACTOR TO TAKE APPROPRIATE MEASURES TO PROTECT CARTRIDGES FROM CONSTRUCTION-RELATED EROSION RUNOFF.

CONTECH ENGINEERED SOLUTIONS LLC
www.contechES.com
9025 Centre Pointe Dr., Suite 400, West Chester, OH 45069
800-338-1122 513-645-7000 513-645-7993 FAX

SFMH60
STORMFILTER
STANDARD DETAIL

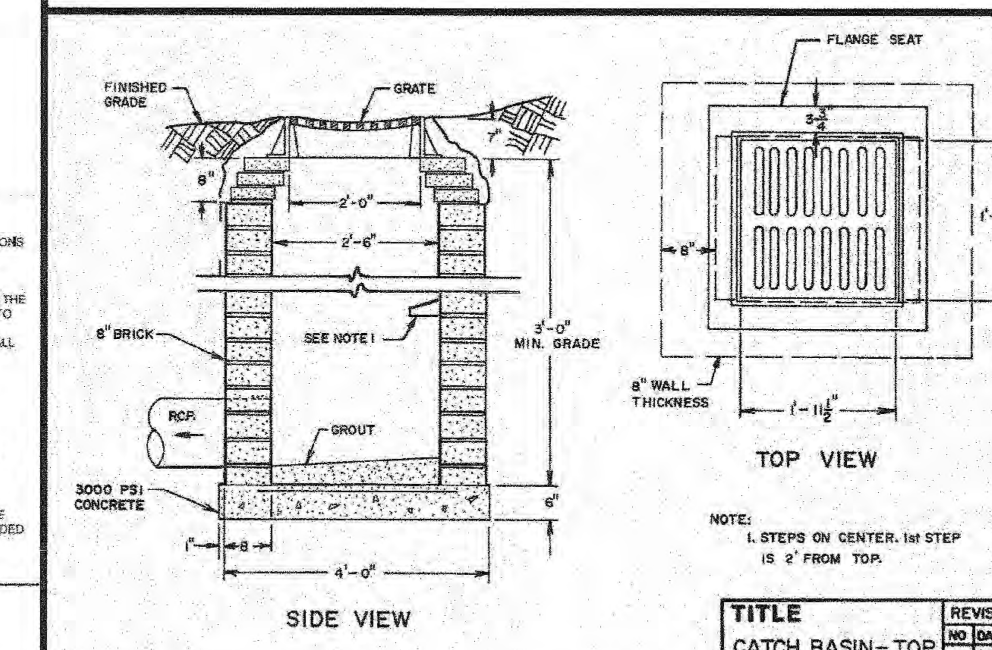

NOTE:
1. STEPS ON CENTER. 1st STEP IS 2' FROM TOP.

NO SCALE

ENGINEERING DEPARTMENT STANDARD DETAILS

TITLE	REVISIONS NO DATE BY	DET.NO
CATCH BASIN - TOP VIEW & SIDE VIEW		SD-6

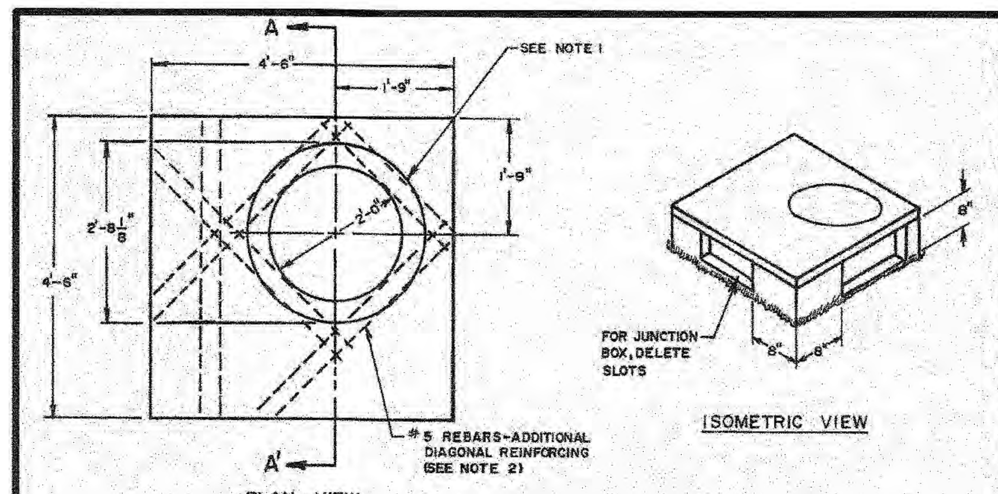

NOTES:
1. SHOWN WITH EAST JORDAN IRON WORKS FLUSH MOUNT MANHOLE FOR USE WITH ALL YARD INLETS & AS AN ALTERNATE FOR JUNCTION BOXES IN SIDEWALKS OR YARD AREAS ONLY. FOR ALL OTHER JUNCTION BOXES USE MANHOLES SPECIFIED IN STD. DET. SD-4C, GROUT AS SHOWN.
2. COVER TO BE 4000 PSI CONCRETE WITH #5 REBAR @ 6" O.C. EACH WAY.
3. SEE STANDARD DETAIL SD-2A FOR SECTION A-A'.

NO SCALE

ENGINEERING DEPARTMENT STANDARD DETAILS

TITLE	REVISIONS NO DATE BY	DET.NO.
YARD INLET/ JUNCTION BOX		SD-2

SH 1 of 2

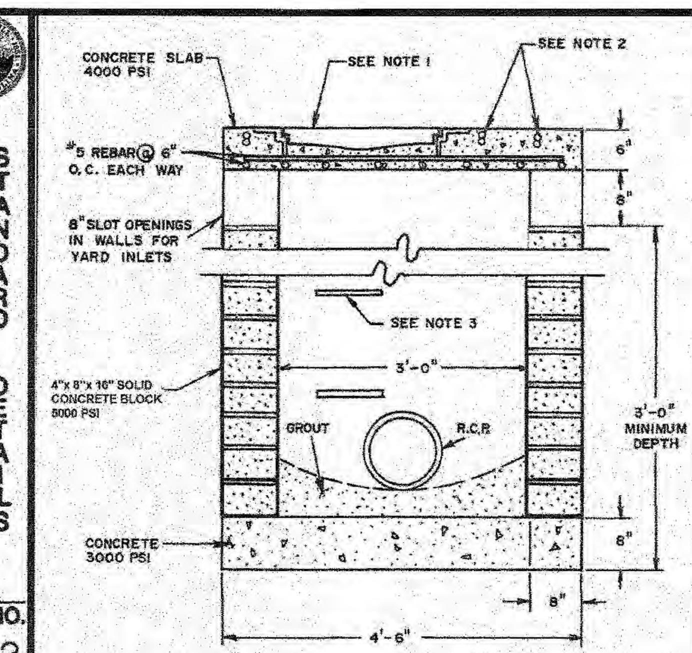

NOTES:
1. EAST JORDAN IRON WORKS FLUSH MOUNT MANHOLE & MH RING. SEE STD. DETAIL SD-4C.
2. #5 REBAR PLACED DIAGONALLY AROUND MANHOLE RING. SEE STD. DET. SD-2.
3. MANHOLE STEPS @ 15" O.C. 1st STEP IS 2'-0" FROM TOP.
4. THIS DETAIL MAY BE USED AS AN ALTERNATE FOR JUNCTION BOXES IN SIDEWALK OR YARD AREAS ONLY.

NO SCALE

ENGINEERING DEPARTMENT STANDARD DETAILS

TITLE	REVISIONS NO DATE BY	DET.NO.
YARD INLET-		SD-2A

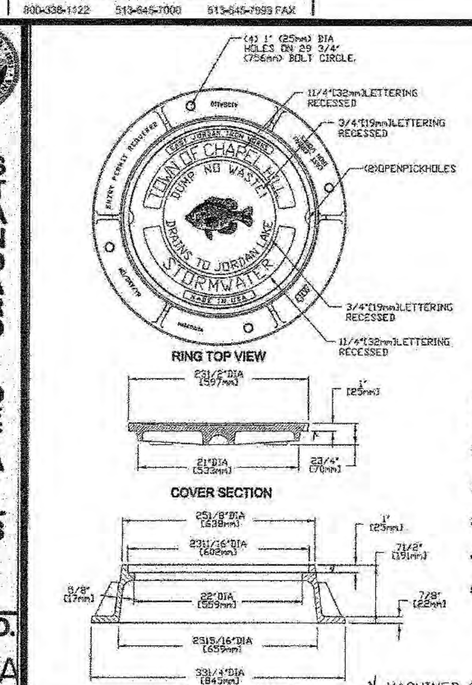

TYPE 2 RING & COVER

EAST JORDAN IRON WORKS V1384-1 RING WITH V1384 COVER OR APPROVED EQUAL. MINIMUM WEIGHTS: RING 190 LBS., COVER 120 LBS.

1. TYPE 2 RING & COVER TO BE USED IN STREETS.
2. MATERIAL TO BE GREY IRON CONFORMING TO ASTM A48 CLASS 35 AND SHALL BE UNCOATED.
3. COVER TO MEET PROOF LOAD REQUIREMENTS OF AASHTO M306-89. (40,000 LB. PROOF LOAD)
4. FISH LOGO AND ALL LETTERING TO BE CLEAN, CRISP, AND CLEARLY LEGIBLE.
5. CASTING MUST BE MANUFACTURED IN THE UNITED STATES. MANUFACTURER MUST BE APPROVED BY THE TOWN OF CHAPEL HILL.

√ MACHINED SURFACE

ENGINEERING DEPARTMENT STANDARD DETAILS

TITLE	REVISIONS	DET. NO.
MANHOLE RING & COVER - TYPE 2		SD-4B

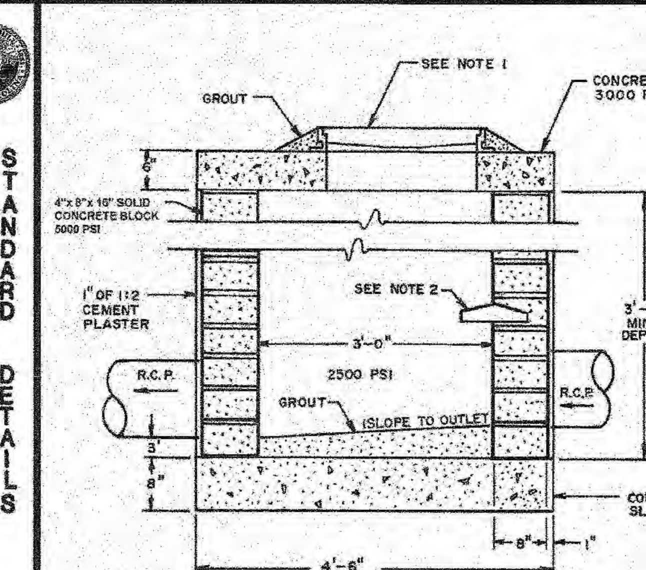

NOTES:
1. USE EAST JORDAN IRON WORKS MANHOLE RING & SOLID COVER IN SIDEWALKS & YARD AREAS. USE MANHOLE RING & SOLID COVER IN STREETS.
2. MANHOLE STEPS @ 15" O.C., 1st STEP IS 2' FROM TOP.

NO SCALE

ENGINEERING DEPARTMENT STANDARD DETAILS

TITLE	REVISIONS NO DATE BY	DET.NO.
JUNCTION BOX DETAIL		SD-3

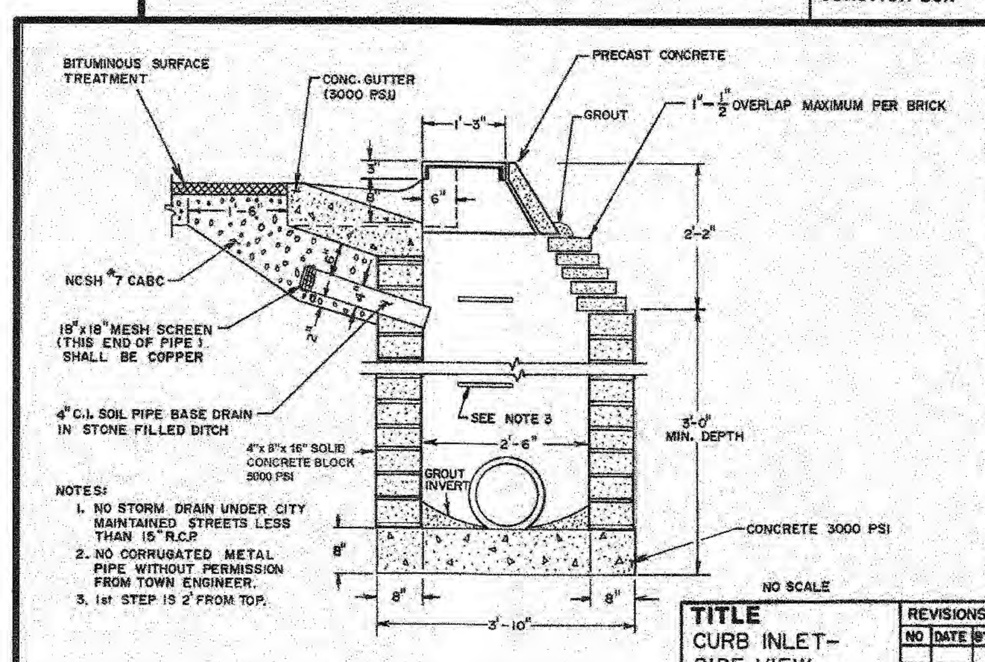

NOTES:
1. NO STORM DRAIN UNDER CITY MAINTAINED STREETS LESS THAN 15" R.C.P.
2. NO CORRUGATED METAL PIPE WITHOUT PERMISSION FROM TOWN ENGINEER.
3. 1st STEP IS 2' FROM TOP.

NO SCALE

ENGINEERING DEPARTMENT STANDARD DETAILS

TITLE	REVISIONS NO DATE BY	DET.NO.
CURB INLET- SIDE VIEW		SD-5

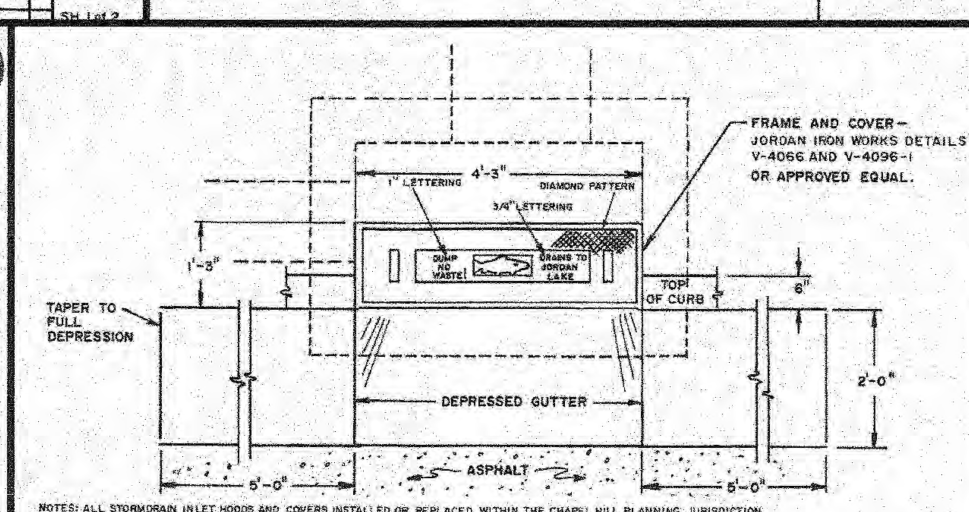

NOTES: ALL STORMDRAIN INLET HOODS AND COVERS INSTALLED OR REPLACED WITHIN THE CHAPEL HILL PLANNING JURISDICTION AFTER JULY 31, 2000 SHALL BE PRE-CAST WITH THE MESSAGE: "DUMP NO WASTE! DRAINS TO JORDAN LAKE" (INCLUDING THE CAST IMAGE OF A FISH).
PRE-CAST HOODS AND COVERS SHALL BE DESIGNED IN ACCORDANCE WITH EAST JORDAN IRON WORKS DETAILS V-4066 AND V-4096-1, OR EQUAL, AND MUST COMPLY WITH APPLICABLE STATE AND TOWN REQUIREMENTS FOR MATERIALS AND INSTALLATION.
THIS DETAIL SUPERCEDES STORM DRAIN(SD-5C) DETAIL AS OF JULY 31, 2000.

NO SCALE

ENGINEERING DEPARTMENT STANDARD DETAILS

TITLE	REVISIONS NO DATE BY	DET.NO.
CURB INLET- TOP VIEW		SD-5A

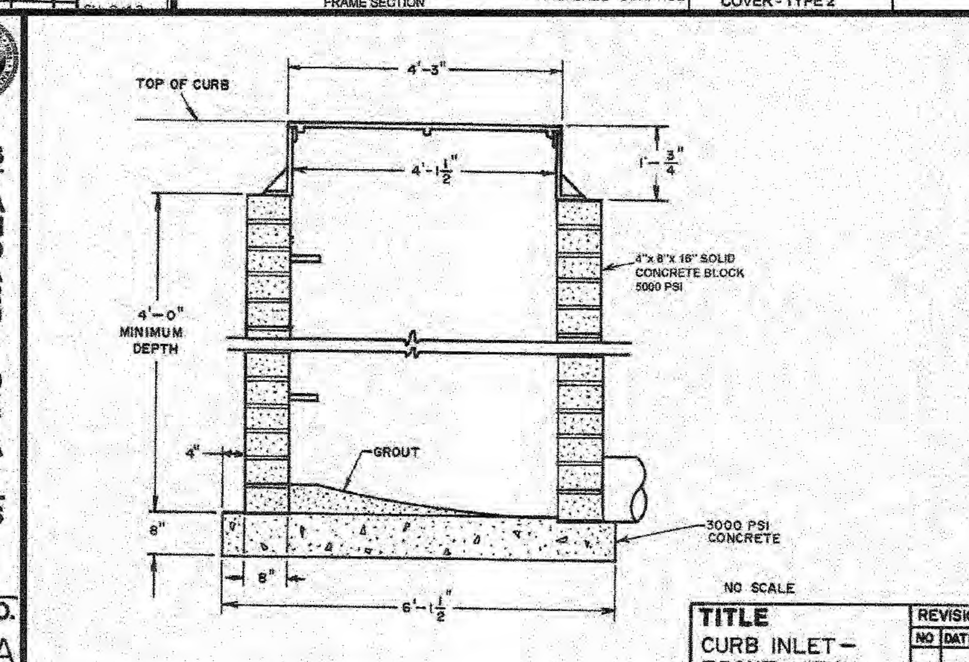

NO SCALE

ENGINEERING DEPARTMENT STANDARD DETAILS

TITLE	REVISIONS NO DATE BY	DET.NO.
CURB INLET- FRONT VIEW		SD-5B

NCDOT STREETS

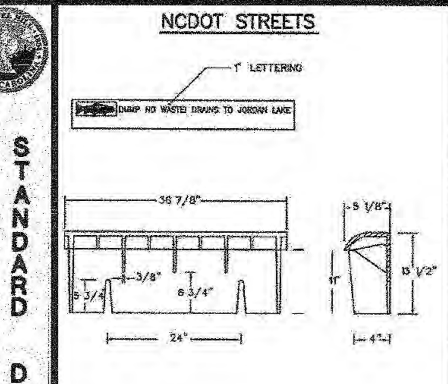

STORMDRAIN CURB INLET HOOD FOR INSTALLATION ON STATE STREETS AND INSTALLATIONS UNDER THE JURISDICTION OF THE NORTH CAROLINA DEPARTMENT OF TRANSPORTATION AND SHALL COMPLY WITH ASTM A48 CL35. IT SHALL BE A HEAVY DUTY TRAFFIC BEARING GRATE WITH AN APPROXIMATE TOTAL WEIGHT OF 575 LBS. (INCLUDES WEIGHT OF GRATE, FRAME & HOOD).

T.O.C.H. STREETS

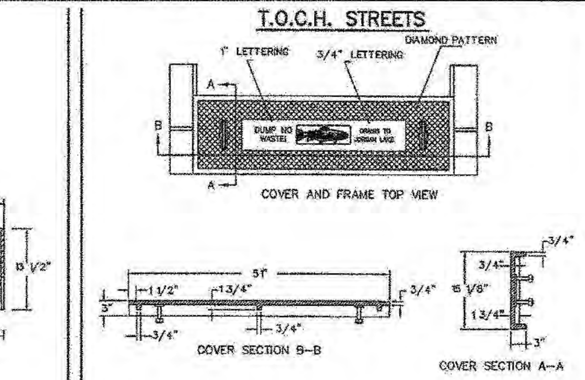

STORMDRAIN CURB INLET COVER FOR INSTALLATION ON TOWN STREETS AND INSTALLATIONS UNDER THE JURISDICTION OF THE TOWN OF CHAPEL HILL SHALL COMPLY WITH ASTM A48 CL35. IT SHALL BE A LIGHT DUTY COVER HAVING AN APPROXIMATE TOTAL WEIGHT OF 307 LBS. (INCLUDES WEIGHT OF COVER AND TWO LEGS).

NOTES:
1. ALL STORMDRAIN INLET HOODS AND COVERS INSTALLED OR REPLACED WITHIN THE CHAPEL HILL PLANNING JURISDICTION AFTER JULY 31, 2000 SHALL BE PRE-CAST WITH THE MESSAGE: "DUMP NO WASTE! DRAINS TO JORDAN LAKE" (INCLUDING THE CAST IMAGE OF A FISH).
2. PRE-CAST HOODS AND COVERS SHALL BE DESIGNED IN ACCORDANCE WITH THE ABOVE MATERIAL SPECIFICATIONS AND MUST COMPLY WITH APPLICABLE STATE AND TOWN REQUIREMENTS FOR MATERIALS AND INSTALLATION.
3. CASTING MUST BE MANUFACTURED IN THE UNITED STATES. MANUFACTURER MUST BE APPROVED BY THE TOWN OF CHAPEL HILL.

N.T.S.

ENGINEERING DEPARTMENT STANDARD DETAILS

TITLE:	REVISIONS	DET.NO.
CURB INLET HOOD AND COVER	8/01 JH 1/03 JH	SD-5C

PHILIP POST & ASSOCIATES
A Division of Pennoni
Firm License F-1267
PENNONI ASSOCIATES INC.
401 Providence Road #200
Chapel Hill, NC 27514
T 919.929.1173 F 919.493.6548

ALL DIMENSIONS MUST BE VERIFIED BY CONTRACTOR AND OWNER MUST BE NOTIFIED OF ANY DISCREPANCIES BEFORE PROCEEDING WITH WORK

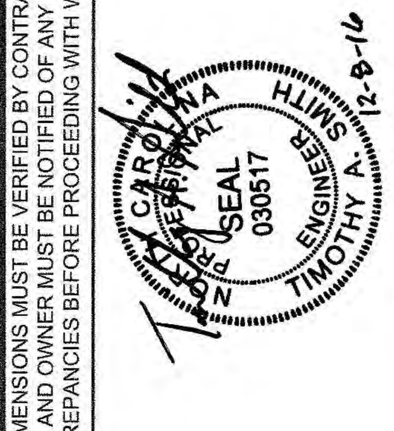

HILLSTONE CHAPEL HILL
1730 FORDHAM BLVD.
CHAPEL HILL, NORTH CAROLINA 27514

DRAINAGE DETAILS

LEON CAPITAL GROUP
5970 FAIRVIEW ROAD, SUITE 450
CHARLOTTE, NORTH CAROLINA 28210

DATE	NO.	REVISIONS	BY

ALL DOCUMENTS PREPARED BY PENNONI ASSOCIATES ARE INSTRUMENTS OF SERVICE IN RESPECT OF THE PROJECT. THEY ARE NOT INTENDED OR REPRESENTED TO BE SUITABLE FOR REUSE BY OWNER OR OTHERS ON THE EXTENSIONS OF THE PROJECT OR ON ANY OTHER PROJECT. ANY REUSE WITHOUT WRITTEN VERIFICATION OR ADAPTATION BY PENNONI ASSOCIATES FOR THE SPECIFIC PURPOSE INTENDED WILL BE AT OWNERS SOLE RISK AND WITHOUT LIABILITY OR LEGAL EXPOSURE TO PENNONI ASSOCIATES; AND OWNER SHALL INDEMNIFY AND HOLD HARMLESS PENNONI ASSOCIATES FROM ALL CLAIMS, DAMAGES, LOSSES AND EXPENSES ARISING OUT OF OR RESULTING THEREFROM.

PROJECT	LCGR1602
DATE	DECEMBER 7, 2016
DRAWING SCALE	1" = 30'
DRAWN BY	WRA
APPROVED BY	TAS

CS6021

P:\Projects\LCGRCOM\LCGR1602-Apartment Site\DESIGN_PUBLISH\CS6021.dwg PLOTTED: 12/8/2016 10:09 AM, BY: William Akin PLOTSTYLE: Pennoni NCS.stb PROJECT STATUS: DESIGN DEVELOPMENT

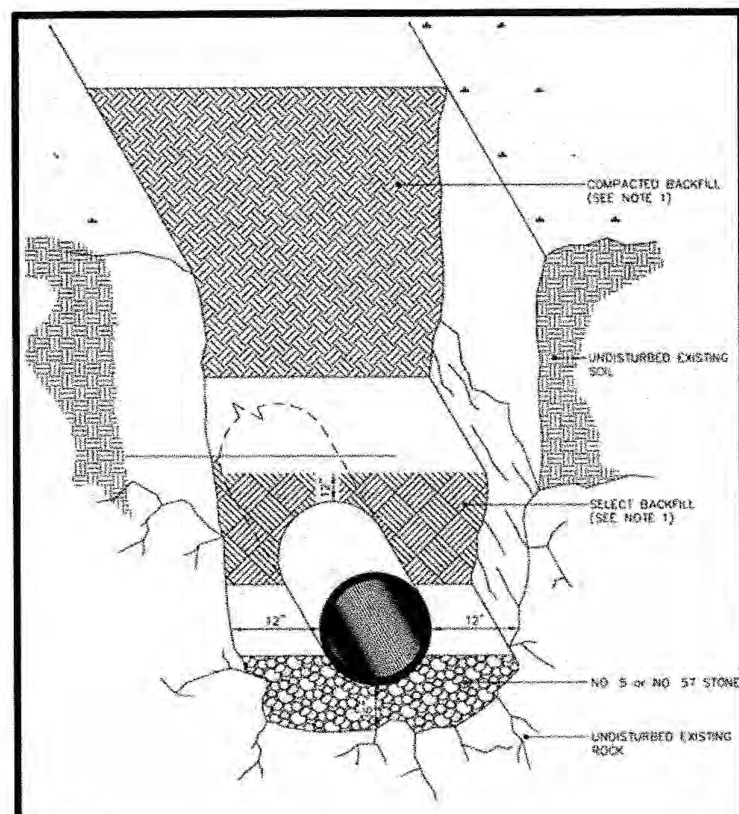

NOTES:
1. See specification section 02275 Trenching, Backfilling, and Compaction of Utilities for backfill and compaction requirements.

ORANGE WATER AND SEWER AUTHORITY
DETAIL of ROCK EXCAVATION — Not To Scale — 511.01

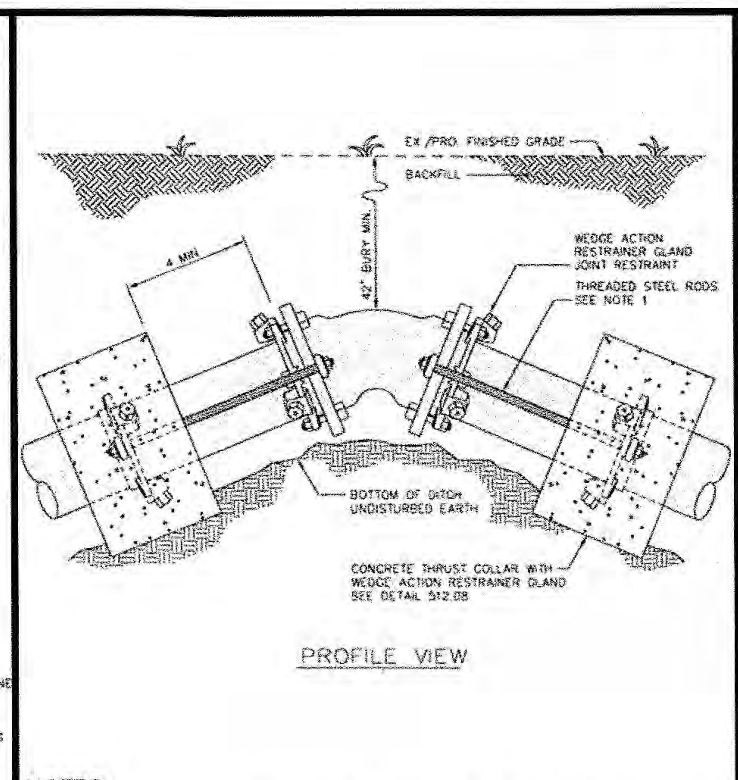

NOTES:
1. If 42" bury depth is not maintained or located in high pressure zone, a minimum of (2) 3/4" dia. rods to be used for pipe thru 24" dia. per joint – a minimum of (2) 1" dia. rods to be used for pipe 30" & 36" dia. per joint – a minimum of (2) 1 1/4" dia. rods to be used for pipe 42" & 48" dia. per joint. (See detail 512.09)

ORANGE WATER AND SEWER AUTHORITY
STANDARD VERTICAL BEND DETAIL — Not To Scale — 512.01

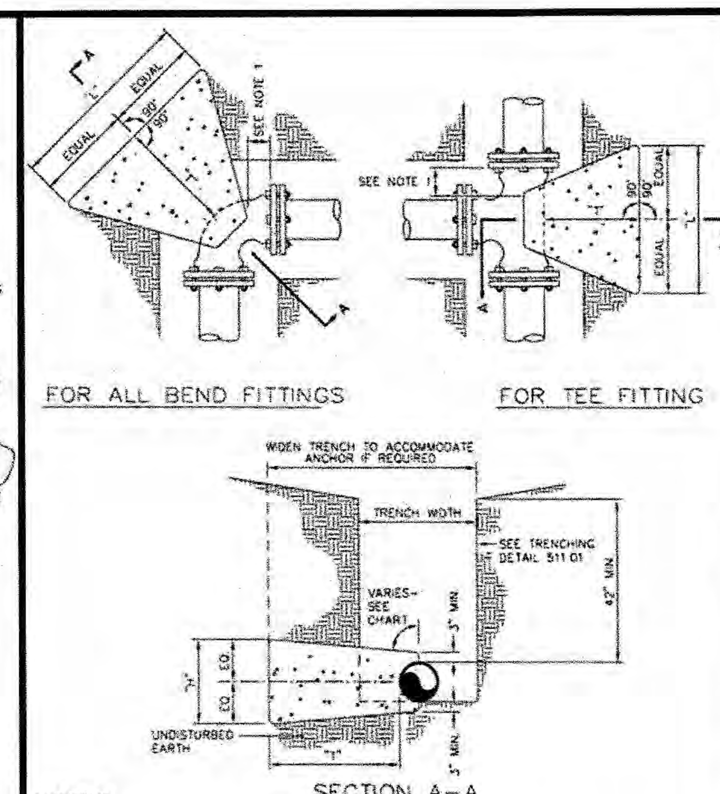

NOTES:
1. Concrete blocking is to be formed to ensure accessibility to fittings and poured against undisturbed earth.
2. Fittings are to be completely wrapped with plastic, prior to pouring concrete.
3. Concrete to be minimum 3,000 psi. @ 28 days.

ORANGE WATER AND SEWER AUTHORITY
BLOCKING DETAIL for HORIZONTAL BENDS AND TEE — Not To Scale — 512.02

TEST PRESSURE = 150 P.S.I.

PIPE SIZE	TYPE FITTING	"L"	"H"	"T"	VOLUME CONCRETE CU. YD.
<4 INCHES	11 1/4°	---	---	---	---
	22 1/2°	1.00	1.00	1.50	0.06
	45°	1.00	1.00	1.50	0.06
	90°	1.00	1.00	2.50	0.09
	TEE / PLUG	1.00	1.00	2.00	0.07
4 INCHES	11 1/4°	1.00	1.00	2.50	0.09
	22 1/2°	1.00	1.00	2.50	0.09
	45°	1.00	1.00	2.50	0.09
	90°	1.50	1.50	2.50	0.15
	TEE / PLUG	1.50	1.50	2.00	0.12
6 INCHES	11 1/4°	1.50	1.50	2.50	0.15
	22 1/2°	1.50	1.50	2.50	0.15
	45°	1.50	1.50	2.50	0.15
	90°	2.00	2.00	3.00	0.28
	TEE / PLUG	2.00	2.00	2.50	0.23
8 INCHES	11 1/4°	2.00	2.00	2.50	0.23
	22 1/2°	2.00	2.00	2.50	0.23
	45°	2.00	2.00	2.75	0.25
	90°	3.00	2.00	3.00	0.39
	TEE / PLUG	3.00	2.00	2.50	0.32
12 INCHES	11 1/4°	2.00	2.00	3.00	0.28
	22 1/2°	2.00	2.00	3.00	0.28
	45°	3.00	2.50	3.00	0.47
	90°	4.50	3.00	3.50	0.94
	TEE / PLUG	4.50	3.00	3.00	0.81
16 INCHES	11 1/4°	2.00	2.00	3.00	0.28
	22 1/2°	3.00	2.00	3.00	0.39
	45°	4.00	3.00	3.50	0.84
	90°	6.50	3.50	3.50	1.54
	TEE / PLUG	6.50	3.50	3.00	1.32

CHART NOTES:
1. If blocking excavation is in lightly compacted fill areas, or in areas where boulders or stumps have been removed, blocking size must be re-sized for the specific location/circumstance by a NC licensed Professional Engineer.
2. Blocking sizes shown in these tables assume the following:
a. Blocking is constructed in residual soils as shown in detail
b. Soil bearing pressure = 2000 psf
c. Velocity of flow = 15 fps
3. This detail not applicable to reducing bends.
4. Neither the weight of the concrete blocking nor friction between concrete blocking and soil was added into blocking sizes computation. Therefore, blocking size is conservative.

ORANGE WATER AND SEWER AUTHORITY
BLOCKING DETAIL for HORIZONTAL BENDS AND TEE — Not To Scale — 512.02

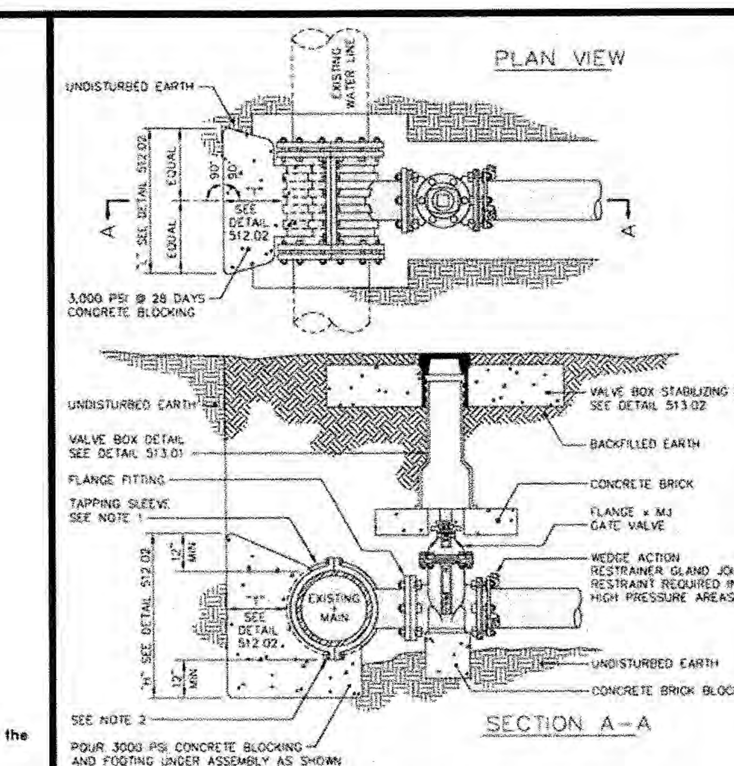

NOTES:
1. Concrete blocking is to be formed to ensure accesibility to fittings and poured against undisturbed earth.
2. Fittings are to be completely wrapped with plastic, prior to pouring concrete.
3. Concrete to be minimum 3,000 psi. @ 28 days.
4. Taps onto in-service mains by OWASA personnel only.

ORANGE WATER AND SEWER AUTHORITY
4" to 12" STANDARD TAPPING SLEEVE and VALVE ASSEMBLY — Not To Scale — 512.04

#	PART	MANUFACTURER MODEL / Cat. No.
1	COMPOUND METER OR TURBINE METER	TO BE APPROVED BY OWASA
2	OS&Y D.I. GATE VALVE WITH RESILIENT SEATS	TO BE APPROVED BY OWASA
3	STRAINER	TO BE APPROVED BY OWASA
4	DIP CLASS 350	SIZE & TYPE DETERMINED BY NC PE
5	DIP CLASS 350	SIZE & TYPE DETERMINED BY NC PE.
6	FLOOR DRAIN WITH STRAINER	SIZE & TYPE DETERMINED BY NC PE BASED ON SIZE OF WATER MAIN. (TO BE APPROVED BY OWASA)
7	MORTARED MASONRY BLOCK PIPE SUPPORTS (MINIMUM 4 REQUIRED)	
8	PRECAST CONCRETE UTILITY VAULT BOX. MIN. 4,000 PSI @ 28 DAYS VERIFY FITTINGS WILL FIT INSIDE BOX BEFORE ORDERING	STAY-RIGHT PRECAST VAULT, H20 LOAD RATING (OR APPROVED EQUIVALENT)
9	DIP FLANGED TEE	AMERICAN CAST IRON PIPE, UNION-TYLER PIPE CO., or U.S. PIPE & FOUNDRY
10	4'-0" MIN. WIDTH (I.D.) x 4'-0" LONG (I.D.) RISER. SEE SHEET 2 of 3 FOR MINIMUM LENGTH.	STAY-RIGHT PRECAST VAULT, H20 LOAD RATING (OR APPROVED EQUIVALENT)
11	4' WIDE x 4' LONG DOOR CAST INTO RISER (DRAIN TO OUTSIDE) SEE SHEET 2 of 3 FOR MINIMUM LENGTH.	BILCO OR HALIDAY PRODUCTS DOUBLE LEAF ACCESS DOOR. USE H20 LOADING IN ALL AREAS. DRAIN TO OUTSIDE (OR APPROVED EQUAL)
12	WALL SLEEVE WITH LINK SEAL (OR APPROVED EQUIVALENT)	TO BE APPROVED BY OWASA
13	REMOTE METER READOUT (IN GALLONS) ELECTRONIC ERT	TO BE APPROVED BY OWASA
14	DIP FLANGE x FLANGE SPOOL PIPE OR THREADED END FOR FLANGE (VERIFY LENGTH)	AMERICAN CAST IRON PIPE, U.S. PIPE & FOUNDRY
15	DIP FLANGED 90 ELBOW (SHORT RADIUS)	AMERICAN CAST IRON PIPE, UNION-TYLER PIPE CO., or U.S. PIPE & FOUNDRY
16	4", 6" OR 8" DIP FLANGED x PE PIPE (USE 1 FULL LENGTH JOINT PIPE)	AMERICAN CAST IRON PIPE, UNION-TYLER PIPE CO., or U.S. PIPE & FOUNDRY
17	FLANGED ADAPTOR	UNIFLANGE (TO BE APPROVED BY OWASA)
18	DIP FLANGED 4"x3" REDUCER	AMERICAN CAST IRON PIPE, UNION-TYLER PIPE CO., or U.S. PIPE & FOUNDRY
19		
20	OS&Y GATE VALVE WITH RESILIENT SEATS	DRILL STEM FOR SEALING IN CLOSED POSITION (TO BE APPROVED BY OWASA)
21	METER BOX	CDR SYSTEMS CORP. / WA04-1118-12C MID-STATES PLASTICS, INC. / MSBC 1118-12

NOTES:
1. Ensure positive surface grade away from box.
2. 3" Meter to use 4" OS&Y DI valves and (2) 4"x3" DI flanged reducers with section of 3" flanged DI pipe and 3" DI flanged coupling adaptor.
3. For vaults less than 6'-6" high see detail 515.14

ORANGE WATER AND SEWER AUTHORITY
3" to 8" WATER METER WITH BYPASS (UNDER GROUND VAULT) — Not To Scale — 515.13 — April 12, 2007

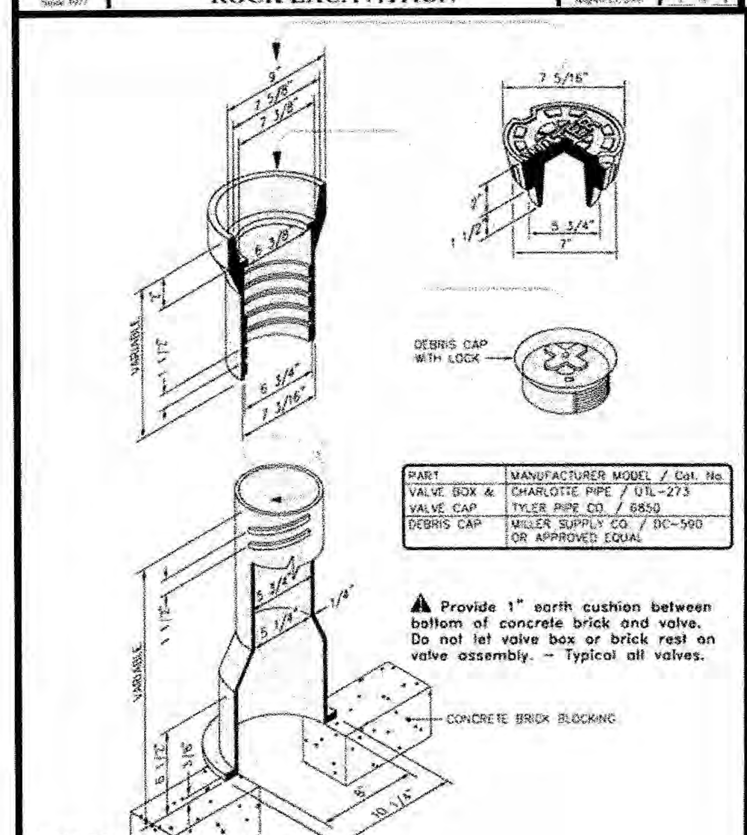

PART	MANUFACTURER MODEL / Cat. No.
VALVE BOX & VALVE CAP	CHARLOTTE PIPE / UTL-273 TYLER PIPE CO. / 6850
DEBRIS CAP	MILLER SUPPLY CO. / DC-590 OR APPROVED EQUAL

Provide 1" earth cushion between bottom of concrete brick and valve. Do not let valve box or brick rest on valve assembly. – Typical all valves.

NOTES:
1. Use heavy duty traffic lid marked "WATER".

ORANGE WATER AND SEWER AUTHORITY
STANDARD SCREW VALVE BOX DETAIL — Not To Scale — 513.01

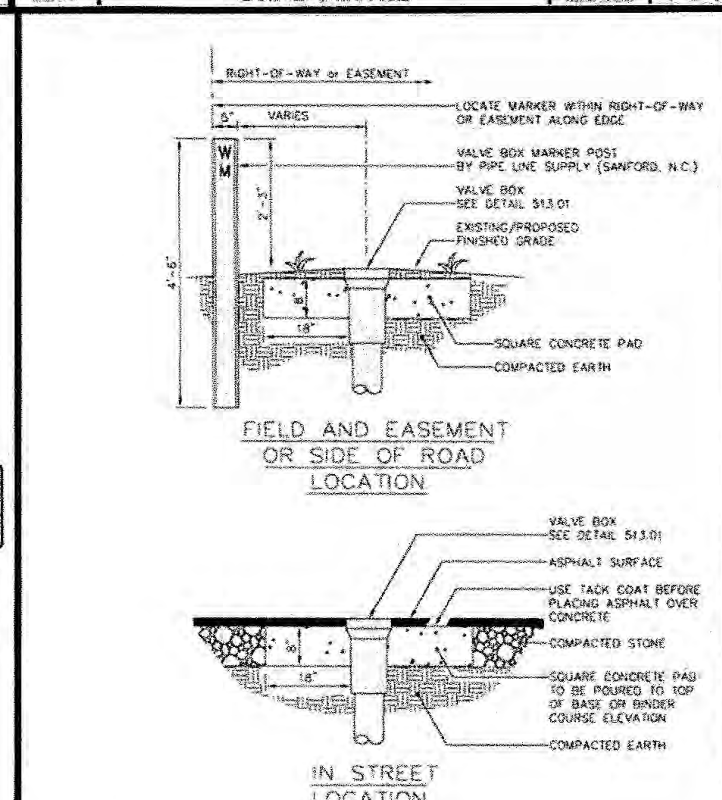

NOTES:
1. Concrete to be minimum 3,000 PSI @ 28 days.

ORANGE WATER AND SEWER AUTHORITY
VALVE BOX STABILIZING PAD DETAILS — Not To Scale — 513.02

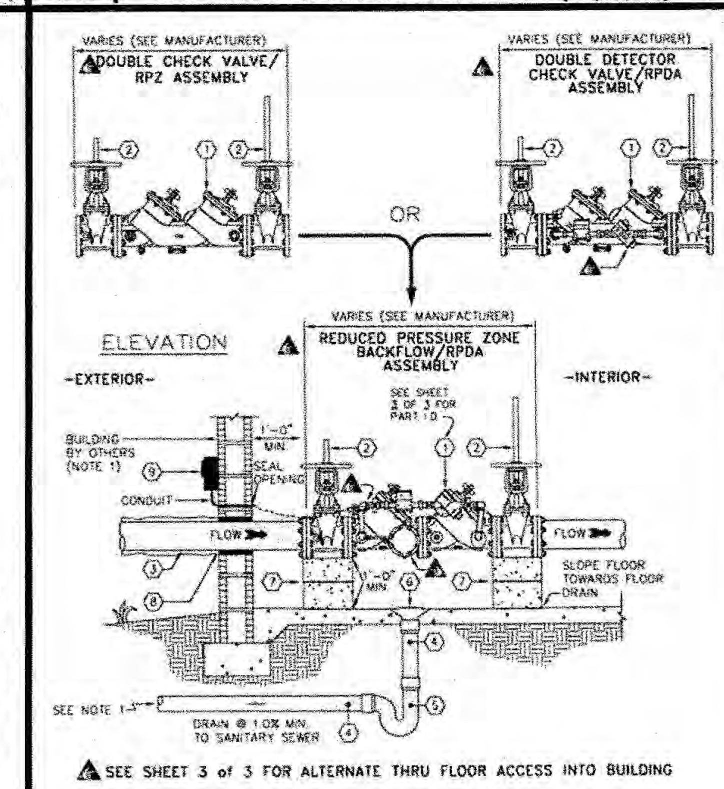

NOTES:
1. OPTIONAL FLOOR DRAIN.

ORANGE WATER AND SEWER AUTHORITY
2 1/2" to 10" DCV, DDCV, RPZ, RPDA ASSEMBLY (INDOOR) — Not To Scale — 515.09

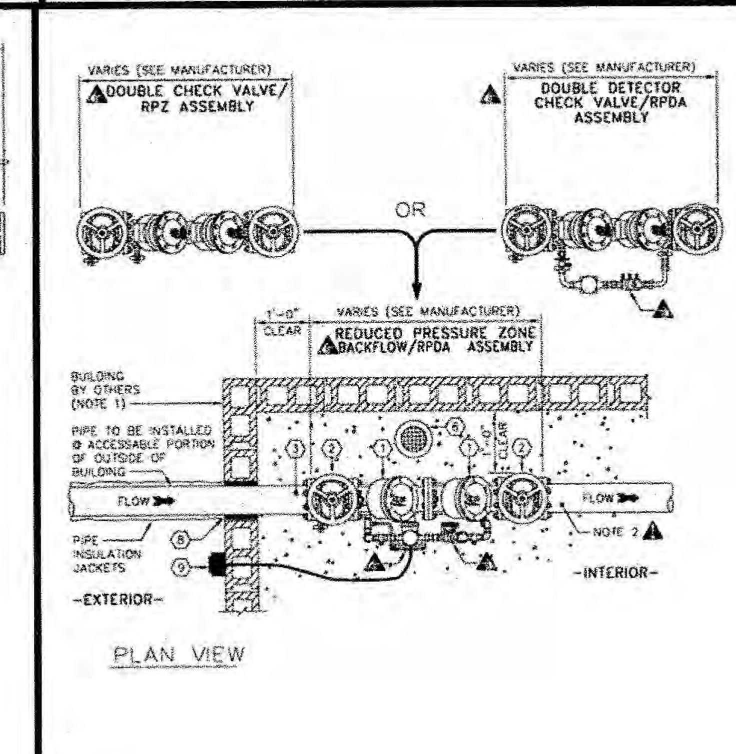

NOTES:
1. Backflow assembly is to be installed at an accessible portion of outside of building, provide doorway & key.
2. For critical facilities, provide bypass line with backflow assembly.
3. Provide minimum 3" annular clearance around riser.

ORANGE WATER AND SEWER AUTHORITY
2 1/2" to 10" DCV, DDCV, RPZ, RPDA ASSEMBLY (INDOOR) — Not To Scale — 515.09

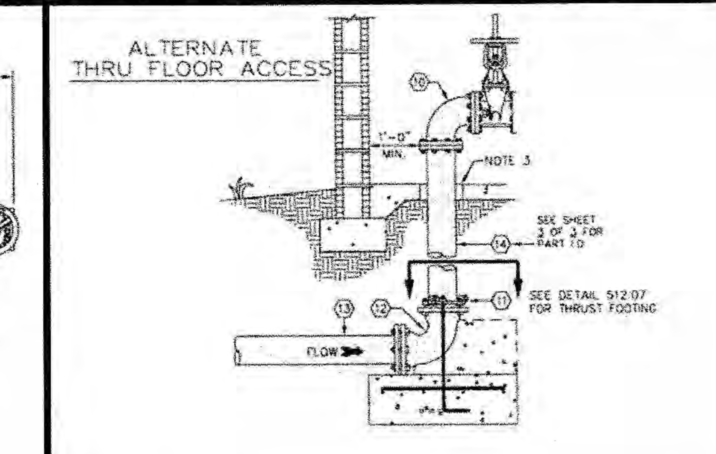

#	PART	MANUFACTURER MODEL / Cat. No.
1	BACKFLOW PREVENTER, AS APPLICABLE	USC & ASSE APPROVED
2	OS&Y GATE VALVE WITH RESILIENT SEATS	TO BE APPROVED BY OWASA
3	DIP FLANGE x FLANGE PIPE (VERIFY LENGTH)	AMERICAN CAST IRON PIPE, or GRIFFIN PIPE CO. TO BE APPROVED BY OWASA
4	CISP OR PVC SCH 40 PIPE	---
5	CISP OR PVC SCH 40 "P" TRAP	---
6	FLOOR DRAIN	SIZE & TYPE DETERMINED BY NC PE TO BE APPROVED BY OWASA
7	MASONRY BLOCK	
8	WALL SLEEVE with LINK SEAL	TO BE APPROVED BY OWASA
9	METER BOX WITH ERT AND METER	PURCHASED FROM OWASA
10	90° DIP FLANGE x FLANGE ELBOW	AMERICAN CAST IRON PIPE, or GRIFFIN PIPE CO. or UNION-TYLER PIPE CO., or U.S. PIPE & FOUNDRY
11	WEDGE ACTION RESTRAINER GLAND JOINT RESTRAINT	EBAA IRON SALES, INC. , FORD
12	90° DIP MJ x MJ ELBOW	AMERICAN CAST IRON PIPE, GRIFFIN PIPE CO. UNION-TYLER PIPE CO., U.S. PIPE & FOUNDRY
13	DIP FLANGE x PE PIPE (VERIFY LENGTH)	AMERICAN CAST IRON PIPE, GRIFFIN PIPE CO. UNION-TYLER PIPE CO., U.S. PIPE & FOUNDRY
14	3" THRU 10" DIP	AMERICAN CAST IRON PIPE, GRIFFIN PIPE CO. UNION-TYLER PIPE CO., U.S. PIPE & FOUNDRY

ORANGE WATER AND SEWER AUTHORITY
2 1/2" to 10" DCV, DDCV, RPZ, RPDA ASSEMBLY (INDOOR) — Not To Scale — 515.09

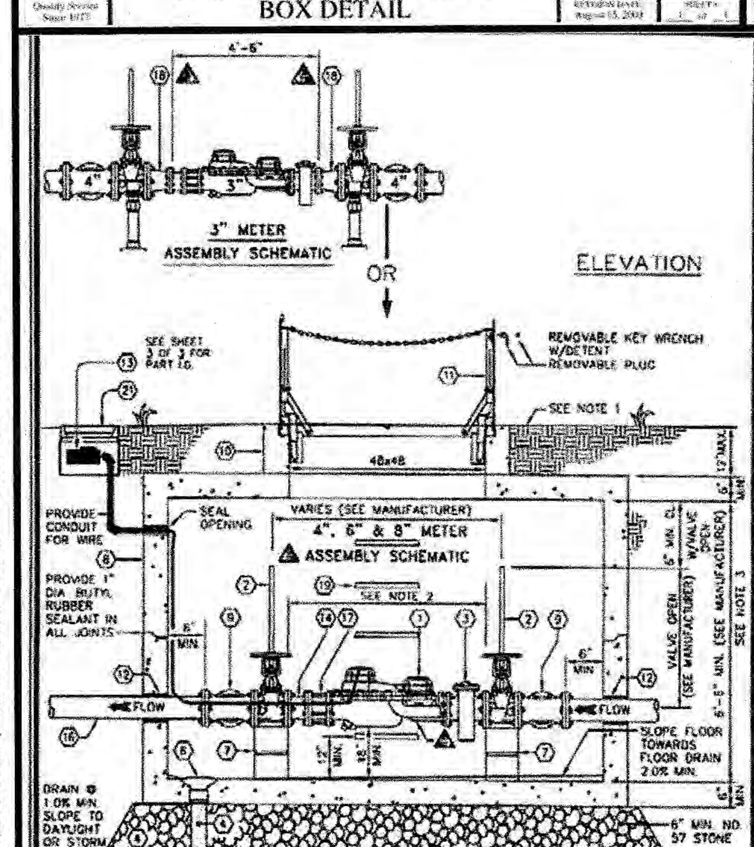

ORANGE WATER AND SEWER AUTHORITY
3" to 8" WATER METER WITH BYPASS (UNDER GROUND VAULT) — Not To Scale — 515.13 — April 13, 2007

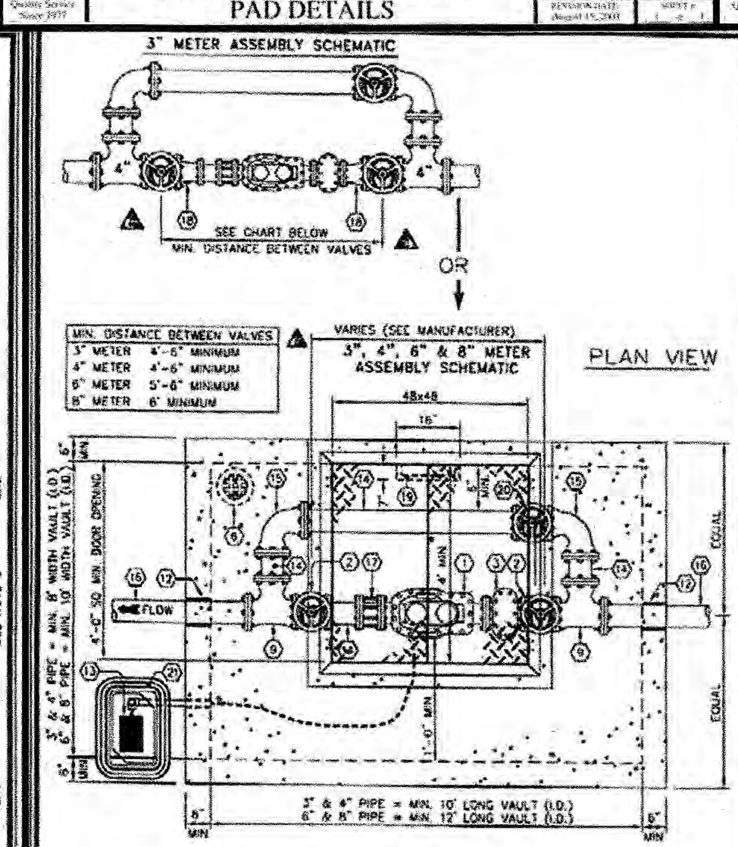

ORANGE WATER AND SEWER AUTHORITY
3" to 8" WATER METER WITH BYPASS (UNDER GROUND VAULT) — Not To Scale — 515.13 — April 13, 2007

NOTES:
1. MAXIMUM OF 75' OF 22 GAUGE / 3 CONDUCTOR WIRE FROM METER TO MOUNTED REMOTE READ BOX
2. PURCHASE BOX AND DETECTOR METER FROM OWASA
3. WIRE TO BE PROVIDED BY CONTRACTOR
4. WIRE CONNECTIONS TO BE MADE BY CONTRACTOR
5. SEAL OPENING PER BUILDING CODE

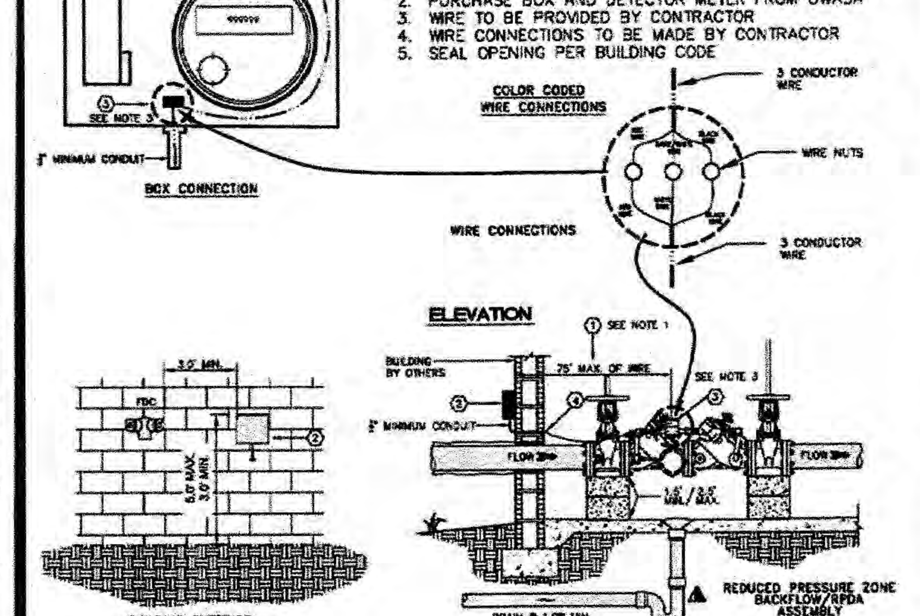

ORANGE WATER AND SEWER AUTHORITY
DETECTOR METER INSTALLATION (FIRE SYSTEM) — Not To Scale

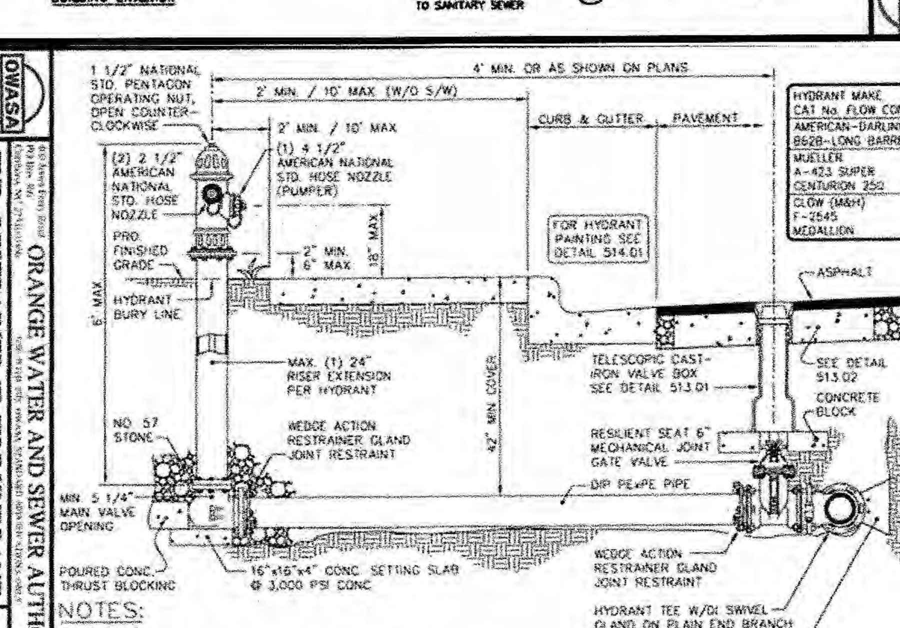

NOTES:
1. Omitted
2. Hydrants to be placed with pumper nozzle facing the street or as otherwise directed by OWASA.
3. When valve box is placed outside of pavement, provide concrete stabilization pad. (detail 513.02)
4. Omitted
5. Where hydrant is set behind guardrail, centerline of pumper nozzle to be a minimum of 12" and a maximum of 18" above top of guardrail. Center of hydrant to be a minimum of 3 feet from guardrail.
6. Fire hydrant to be oiled & greased and cap to be sprayed (Non-petroleum – based) after installation.
7. Do not locate hydrants in sidewalks or block pedestrian flow.

ORANGE WATER AND SEWER AUTHORITY
TYP. RESTRAINED JT. FIRE HYDRANT STREETS with CURB & GUTTER — Not To Scale — 514.03

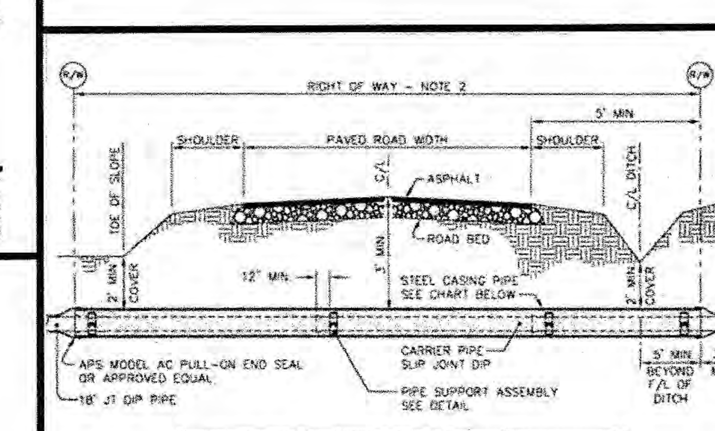

CARRIER PIPE		CASING PIPE			
		RAILROAD		HIGHWAY	
NOMINAL DIAMETER	OUTSIDE DIAMETER	OUTSIDE DIAMETER	WALL THICKNESS	OUTSIDE DIAMETER	WALL THICKNESS
6" & UNDER	6.90"	12 3/4"	0.188"	12 3/4"	0.250"
8"	9.05"	16"	0.250"	16"	0.250"
10"	11.10"	20"	0.281"	20"	0.250"
12"	13.20"	24"	0.344"	24"	0.250"
14"	15.30"	28"	0.406"	28"	0.312"
16"	17.40"	30"	0.406"	30"	0.312"
20"	21.60"	42"	0.563"	42"	0.312"
24"	25.80"	42"	0.563"	42"	0.312"

•DIMENSIONS ARE WITHOUT COATINGS

NOTES:
1. Installation by dry bore & jacking.
2. Bore to run from Right-of-Way to Right-of-Way unless approved otherwise by OWASA.
3. Grease encasement pipe as required for ease of installation.
4. Steel pipe to be 35,000 psi min. yield strength, grade B.
5. All exposed metal to be coated with epoxy or asphaltic material.
6. Skids to be installed, manufactured by ITT Grinnell, Charlotte, N.C. / Spider Manufacturing, Durham, N.C. / APS casing spacers by Advanced Products Systems Inc, Lafayette, LA. / or approved equal.

ORANGE WATER AND SEWER AUTHORITY
TYPICAL DETAIL for BORE UNDER PAVED ROADS / HIGHWAYS — Not To Scale — 517.01

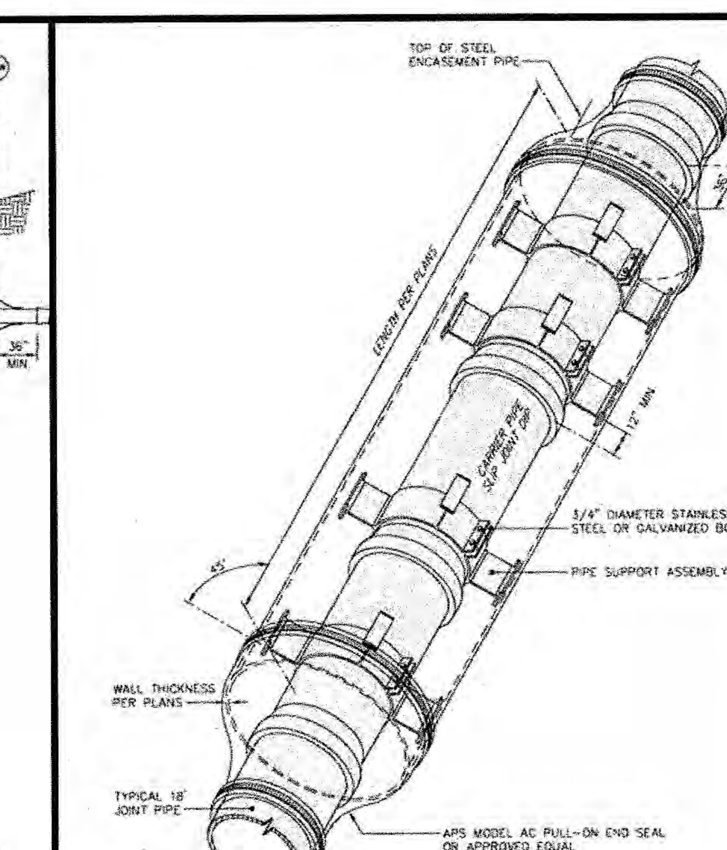

ORANGE WATER AND SEWER AUTHORITY
TYPICAL DETAIL for BORE UNDER PAVED ROADS / HIGHWAYS — Not To Scale — 517.01

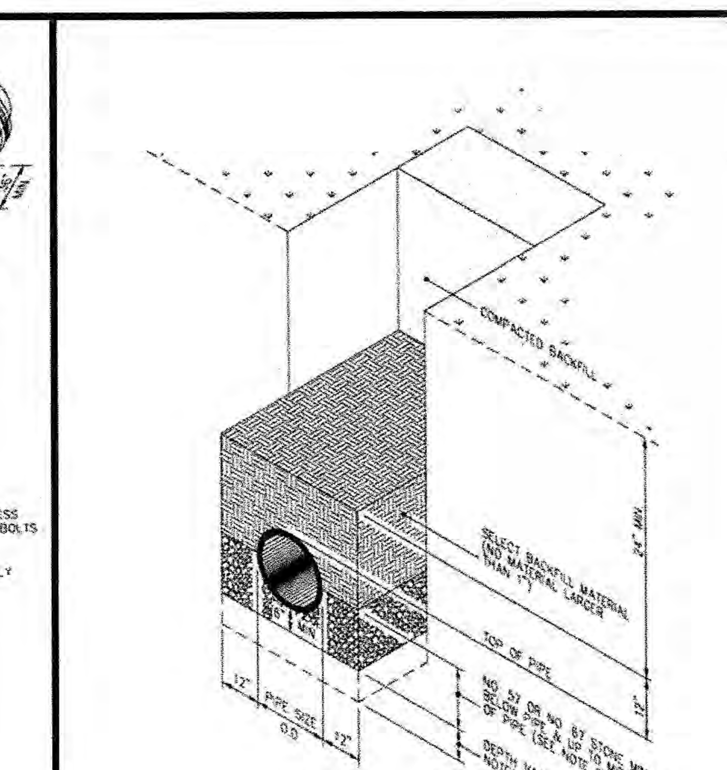

NOTES:
1. Foundation stone shall be required when soil conditions are unsuitable.
2. An additional 1 inch depth of cushioning material will be required for each additional 2 feet of trench depth in excess of 16 feet up to a maximum of 12 inches of cushioning material.

ORANGE WATER AND SEWER AUTHORITY
SANITARY SEWER BEDDING DETAIL — Not To Scale — 531.01

PHILIP POST & ASSOCIATES
A Division of Pennoni — Firm License F-1267
PENNONI ASSOCIATES INC.
401 Providence Road #200
Chapel Hill, NC 27514
T 919.929.1173 F 919.493.6548

ALL DIMENSIONS MUST BE VERIFIED BY CONTRACTOR AND OWNER MUST BE NOTIFIED OF ANY DISCREPANCIES BEFORE PROCEEDING WITH WORK

NORTH CAROLINA PROFESSIONAL SEAL 030517 ENGINEER TIMOTHY A. SMITH 12-8-16

HILLSTONE CHAPEL HILL
1730 FORDHAM BLVD.
CHAPEL HILL, NORTH CAROLINA 27514

O.W.A.S.A. DETAILS

LEON CAPITAL GROUP
5970 FAIRVIEW ROAD, SUITE 450
CHARLOTTE, NORTH CAROLINA 28210

DATE	NO.	REVISIONS	BY

ALL DOCUMENTS PREPARED BY PENNONI ASSOCIATES ARE INSTRUMENTS OF SERVICE IN RESPECT OF THE PROJECT. THEY ARE NOT INTENDED OR REPRESENTED TO BE SUITABLE FOR REUSE BY OWNER OR OTHERS ON THE EXTENSIONS OF THE PROJECT OR ON ANY OTHER PROJECT. ANY REUSE WITHOUT WRITTEN VERIFICATION OR ADAPTATION BY PENNONI ASSOCIATES FOR THE SPECIFIC PURPOSE INTENDED WILL BE AT OWNERS SOLE RISK AND WITHOUT LIABILITY OR LEGAL EXPOSURE TO PENNONI ASSOCIATES; AND OWNER SHALL INDEMNIFY AND HOLD HARMLESS PENNONI ASSOCIATES FROM ALL CLAIMS, DAMAGES, LOSSES AND EXPENSES ARISING OUT OF OR RESULTING THEREFROM.

PROJECT	LCGR1602
DATE	DECEMBER 7, 2016
DRAWING SCALE	AS SHOWN
DRAWN BY	WRA
APPROVED BY	TAS

CS6041

SHEET 19 OF 21

P:\Projects\LCGRCOM\LCGR1602-Apartment Site\DESIGN_PUBLISH\CS6041.dwg PLOTTED: 12/7/2016 4:31 PM, BY: Donald Chitty PLOTSTYLE: Pennoni NCS.stb PROJECT STATUS: DESIGN DEVELOPMENT

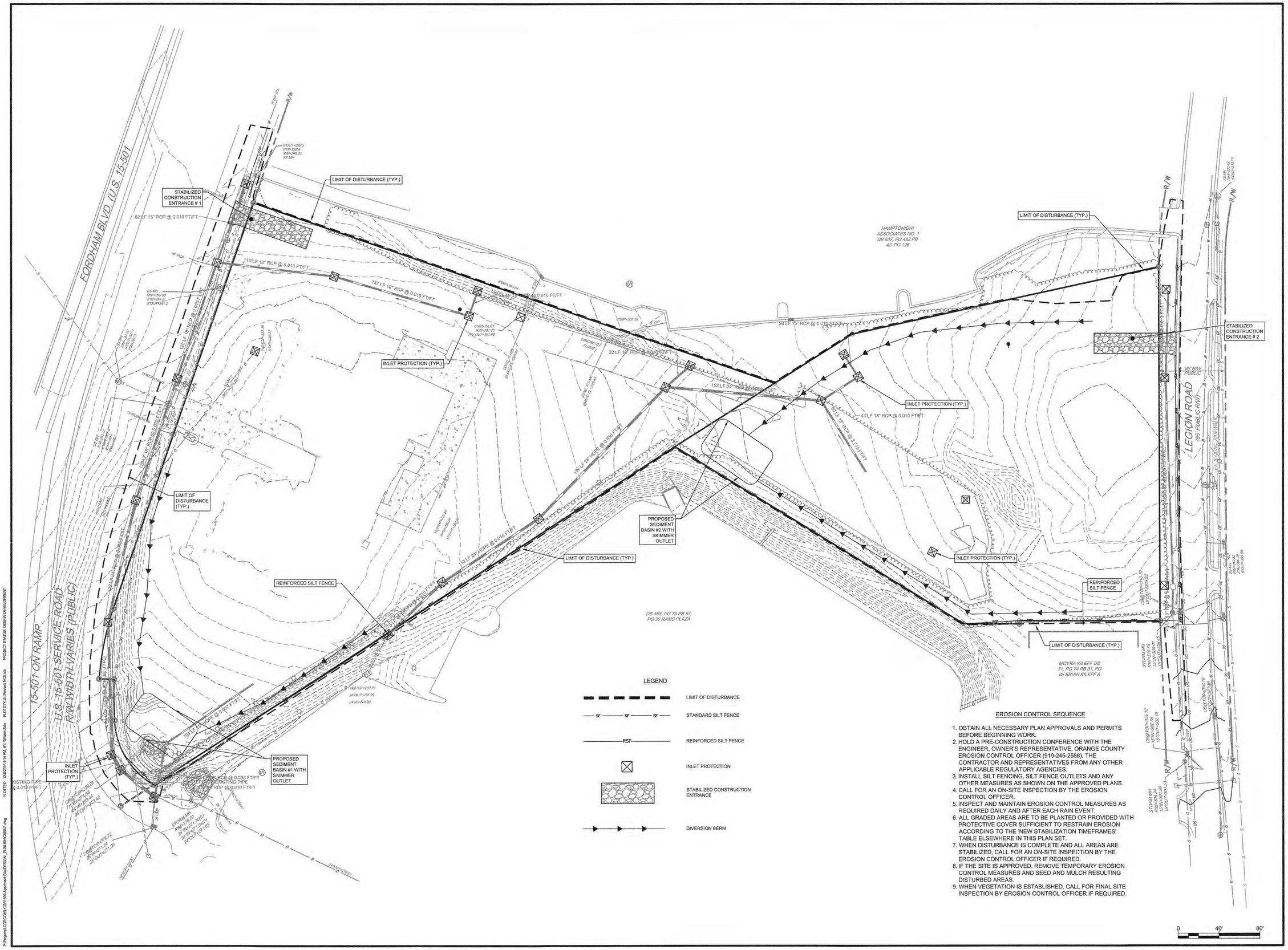

PHILIP POST & ASSOCIATES
A Division of PENNONI Firm License F-1267
PENNONI ASSOCIATES INC.
401 Providence Road #200
Chapel Hill, NC 27514
T 919.929.1173 F 919.493.6548

ALL DIMENSIONS MUST BE VERIFIED BY CONTRACTOR AND OWNER MUST BE NOTIFIED OF ANY DISCREPANCIES BEFORE PROCEEDING WITH WORK

NORTH CAROLINA PROFESSIONAL SEAL 030517 ENGINEER TIMOTHY A. SMITH
12-9-16

HILLSTONE CHAPEL HILL

1730 FORDHAM BLVD.
CHAPEL HILL, NORTH CAROLINA 27514

SOIL EROSION AND SEDIMENT CONTROL PLAN

LEON CAPITAL GROUP
5970 FAIRVIEW ROAD, SUITE 450
CHARLOTTE, NORTH CAROLINA 28210

DATE	NO.	REVISIONS	BY
#	#	#	#
#	#	#	#
#	#	#	#
#	#	#	#
#	#	#	#
#	#	#	#

ALL DOCUMENTS PREPARED BY PENNONI ASSOCIATES ARE INSTRUMENTS OF SERVICE IN RESPECT OF THE PROJECT. THEY ARE NOT INTENDED OR REPRESENTED TO BE SUITABLE FOR REUSE BY OWNER OR OTHERS ON THE EXTENSIONS OF THE PROJECT OR ON ANY OTHER PROJECT. ANY REUSE WITHOUT WRITTEN VERIFICATION OR ADAPTATION BY PENNONI ASSOCIATES FOR THE SPECIFIC PURPOSE INTENDED WILL BE AT OWNER'S SOLE RISK AND WITHOUT LIABILITY OR LEGAL EXPOSURE TO PENNONI ASSOCIATE; AND OWNER SHALL INDEMNIFY AND HOLD HARMLESS PENNONI ASSOCIATES FROM ALL CLAIMS, DAMAGES, LOSSES AND EXPENSES ARISING OUT OF OR RESULTING THEREFROM.

PROJECT	LCGR1602
DATE	DECEMBER 7, 2016
DRAWING SCALE	1"= 40'
DRAWN BY	BF
APPROVED BY	TAS

CS8001

P:\Projects\LCGR\DGN\LCGR1602-Apartment Site\DESIGN_PUBLISH\CS8001.dwg PLOTTED: 12/8/2016 4:14 PM, BY: William Aldo PLOTSTYLE: Pennoni NCS.stb PROJECT STATUS: DESIGN/DEVELOPMENT